VEVOR

Upgrade · The Home Creator Way

Plate type wine cabinet

MODEL: DX0202-C250499S-01

VEVOR
Upgrade·The Home Creator Way

Plate type wine cabinet

MODEL: DX0202-C250499S-01

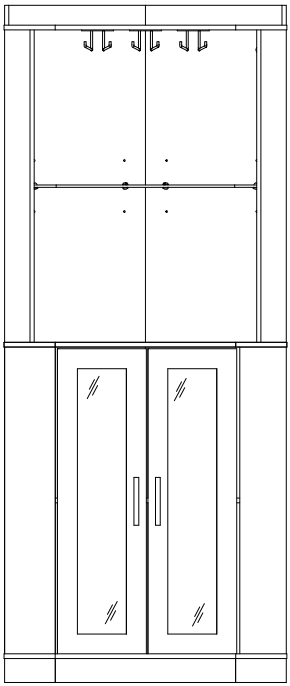

This is the original instruction, please read all manual instructions carefully before operating. VEVOR reserves a clear interpretation of our user manual. The appearance of the product shall be subject to the product you received. Please forgive us that we won't inform you again if there are any technology or software updates on our product.

SAFETY INSTRUCTIONS

INTRODUCTION

Thank you for purchasing our products. Committed to providing customers with the best quality products and service has always been our lifelong goal. Before using the product, please read this instruction manual carefully to ensure correct use. Keep the instruction manual in a place where the user can find it at any time.

ASSEMBLY PRECAUTIONS

There are many components and accessories in the package. Each component and accessory is labeled with a letter or a number, check carefully before using any of them. Keep them away from children to prevent accidents.

1. Assemble only according to these instructions. Improper assembly may create hazards.
2. Wear ANSI-approved safety goggles and heavy-duty work gloves during assembly.
3. Keep the assembly area clean and well-lit.
4. Keep bystanders out of the area during assembly.
5. Do not assemble if tired or when under the influence of alcohol, drugs or medication.
6. The product capabilities apply to properly and completely assembled products only.
7. If possible, you can use power tools to make assembly easier.
8. The main components of the product is relatively heavy. Please pay attention to safety during installation.
9. The product is not stable during installation, Please do not move it randomly before it is completely installed.
10. For additional information regarding the parts listed in the following.
11. pages, please refer to the Assembly Diagram of this manual. Unwrap and separate all parts in a clean work area.

***PLEASE BE SURE TO FOLLOW THE INSTALLATION STEPS IN THE MANUAL TO AVOID UNNECSSARY LOSSES CAUSED BY IMPROPER INSTALLATION.**

USE PRECAUTIONS

1) Do not exceed specified weight capacities.
2) Use only on a flat, level, hard, and smooth surface
3) Use as intended only.
4) Inspect before every use; do not use if parts are loose or damaged.

WARNING

Children have died from furniture tipover. To reduce the risk of furniture tipover:

- **NEVER put a TV on this product.**
- **NEVER allow children to stand, climb or hang on drawers,doors,or shelves.**
- **Place heaviest items in the lowest drawers.**

SAVE THIS MANUAL

FCC Information for USB light strings:

CAUTION: Changes or modifications not expressly approved by the party responsible for compliance could void the user's authority to operate the equipment!

This device complies with Part 15 of the FCC Rules. Operation is subject to the following two conditions:

1) This product may cause harmful interference.

2)This product must accept any interference received, including interference that may cause undesired operation.

WARNING: Changes or modifications to this product not expressly approved by the party.responsible for compliance could void the user's authority to operate the product.

Note: This product has been tested and found to comply with the limits for a Class B digital device pursuant to Part 15 of the FCC Rules, These limits are designed to provide reasonable protection against harmful interference in a residential installation.

This product generates, uses and can radiate radio frequency energy, and if not installed and used in accordance with the instructions, may cause harmful interference to radio communications. However, there is no guarantee that interference will not occur in a particular installation. If this product does cause harmful interference to radio or television reception,which can be determined by turning the product off and on, the user is encouraged to try to correct the interference by one or more of the following measures.

· Reorient or relocate the receiving antenna.

· Increase the distance between the product and receiver.

· Connect the product to an outlet on a circuit different from that to which the receiver is connected.

· Consult the dealer or an experienced radio/TV technician for assistance.

CORRECT DISPOSAL FOR USB LIGHT STRINGS



This product is subject to the provision of european Directive 2012/19/EU. The symbol showing a wheelie bin crossed through indicates that the product requires separate refuse collection in the European Union. This applies to the product and all accessories marked with this symbol. Products marked as such may not be discarded with normal domestic waste, but must be taken to acollection point for recycling electrical and electronic devices.

Installation of Cams and Pins

Screw the pin into the hole. To set the cams correctly, ensure that the arrow on the cam is opening to the hole of the pin it is locking. Lock the cam by turning the cam head with a screwdriver until it is tightened. Please do not use an electric screwdriver to assemble the unit.

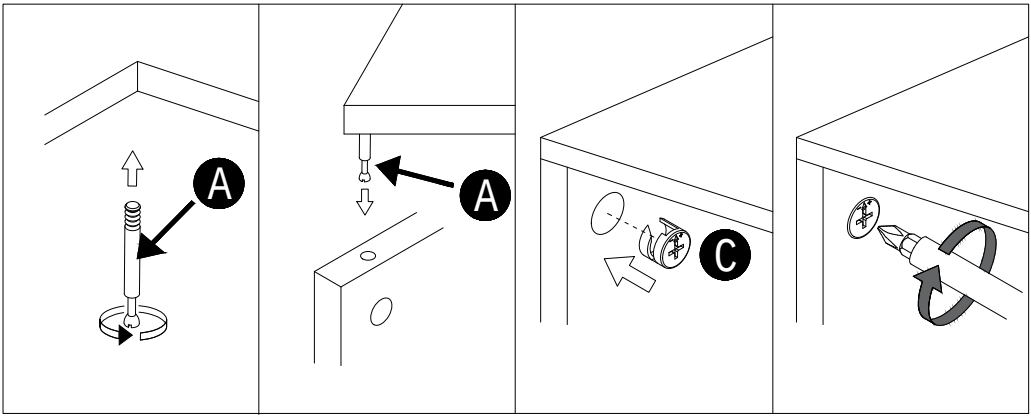

Read each step carefully before starting. It is very important that each step of instruction is performed in the correct order. If these steps are not followed in sequence, assembly difficulties will occur.

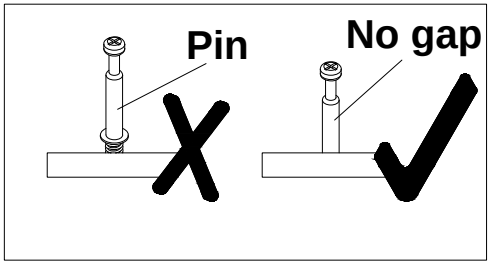

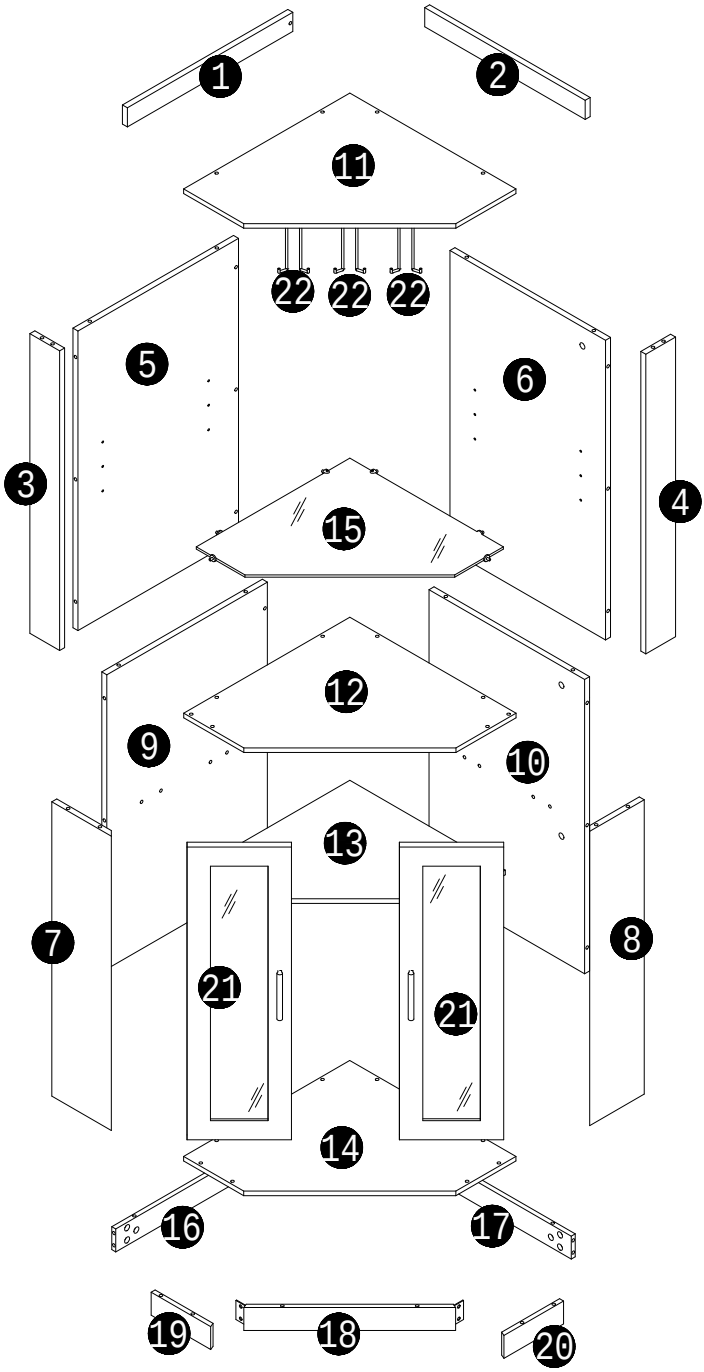
1
2
11
22
22
22
5
6
3
4
15
12
9
10
13
7
8
21
21
14
16
17
19
18
20

Parts & Hardware List

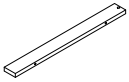 1 1pc	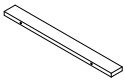 2 1pc	 3 1pc
 4 1pc	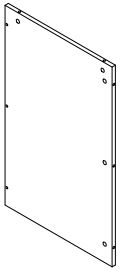 5 1pc	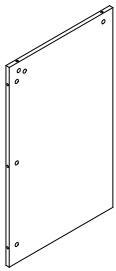 6 1pc
 7 1pc	 8 1pc	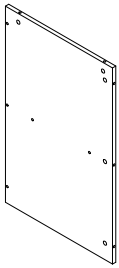 9 1pc
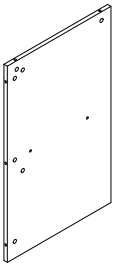 10 1pc	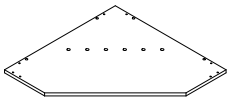 11 1pc	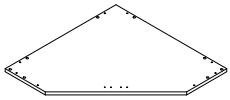 12 1pc

Parts & Hardware List

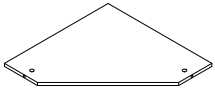	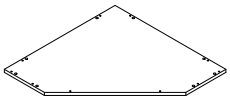	
13 1pc	14 1pc	Tempered Glass 15 1pc
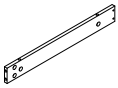	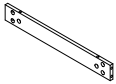	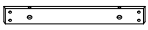
16 1pc	17 1pc	18 1pc
		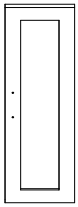
19 1pc	20 1pc	21 2pcs
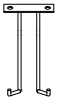		
22 3pcs		

Parts & Hardware List

 A 46pcs	 M7X50MM B 27pcs	 C 46pcs	 DW135 ° K 4pcs
 Ø6X30MM L 4pcs+1	 M 2pcs	 M6X10MM N 14pcs	O 6pcs
 ST3.5X12MM P 28pcs	 Q 2pcs	 S 2pcs	 M4X22MM T 4pcs
 U 1pc	 W 4pcs	 X 2pcs	 Z 2pcs
 1pc		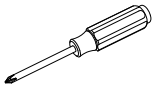	

1

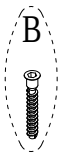

x5

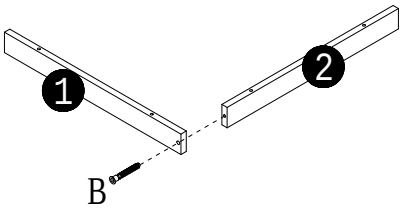

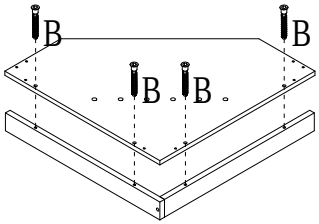

2



x6

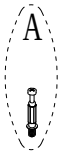

x8

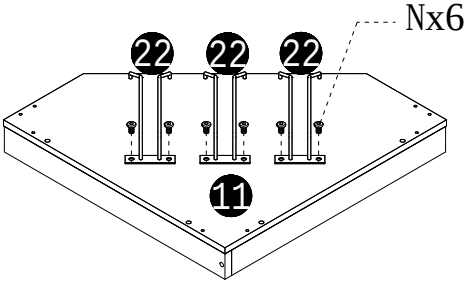

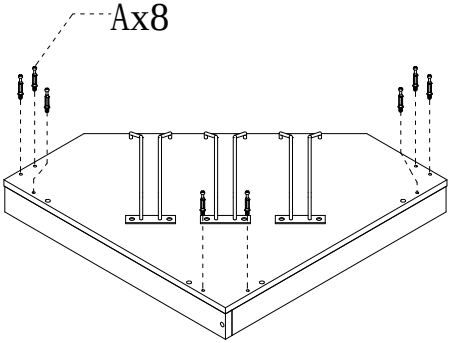

3



x3

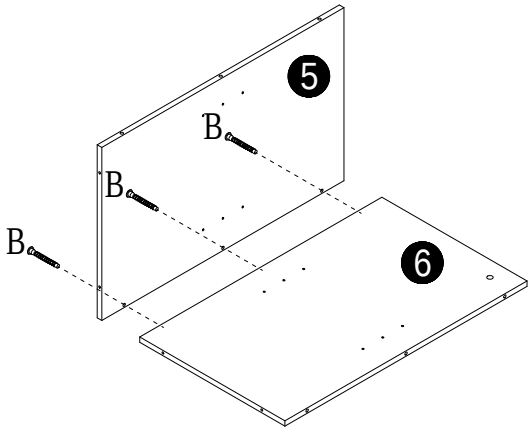

4



x6

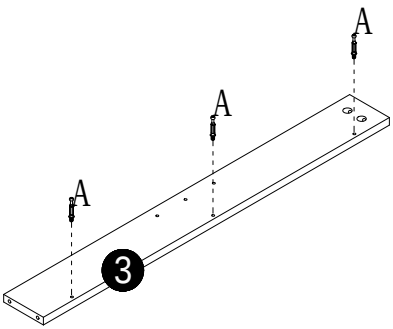

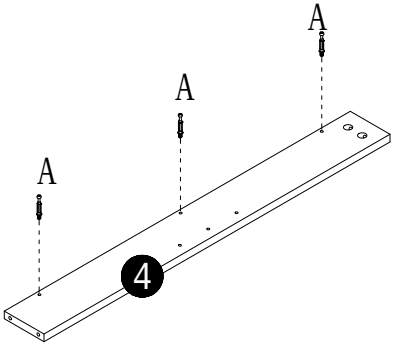

5

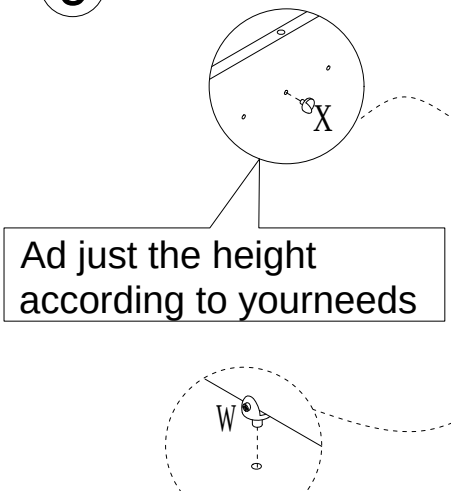

W x4

Tempered

V

Upgra

6

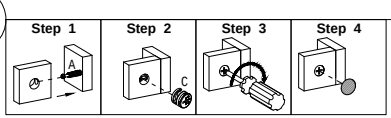

C x6

X x2

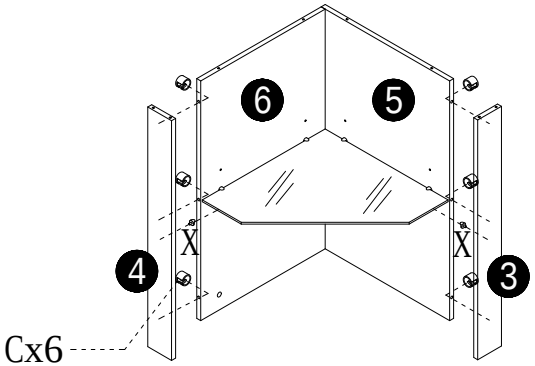

7

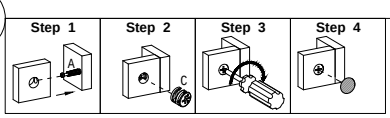



x8

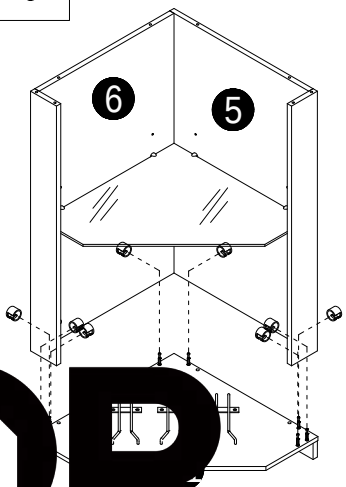

EVOR

e · The Home Creator Way

8



x8

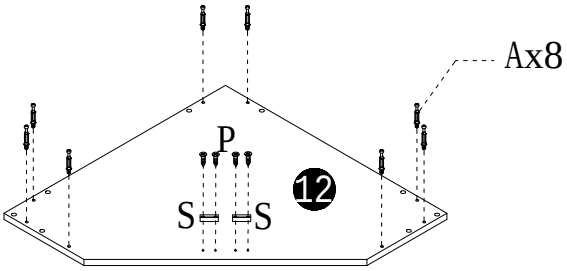

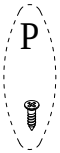

x4

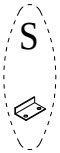

x2

9

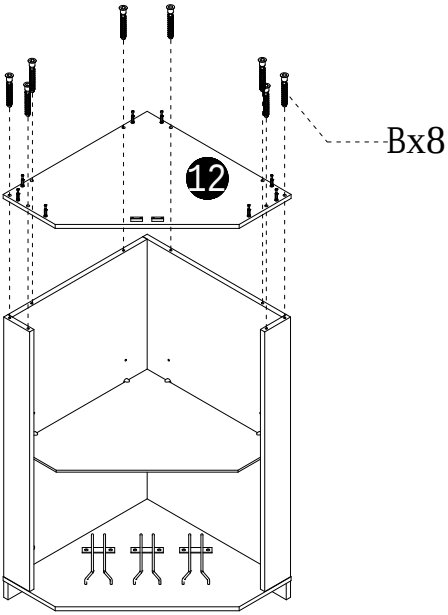



10

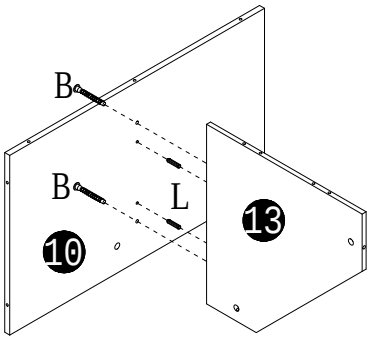

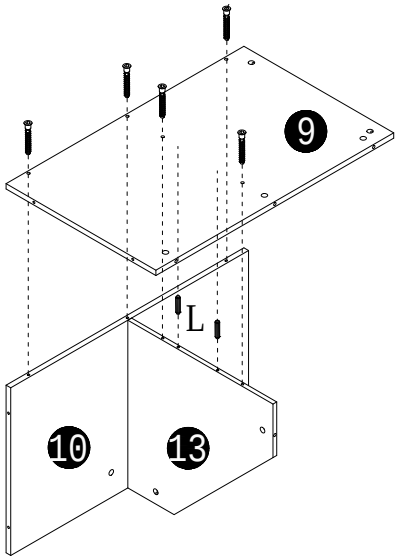





11



x8

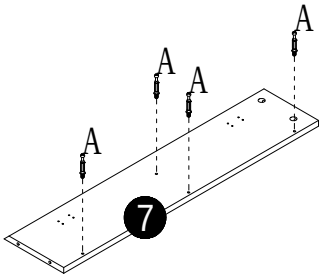

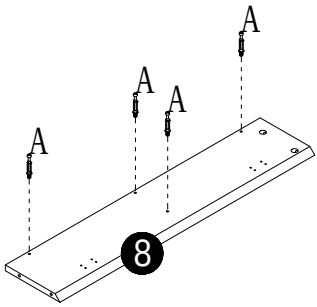

12

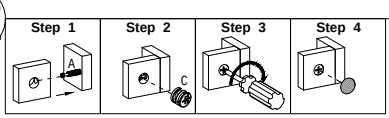



x8

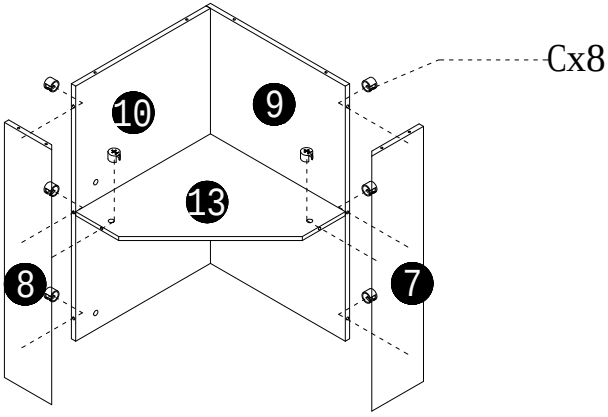

13

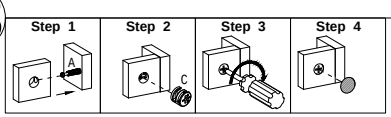



x8

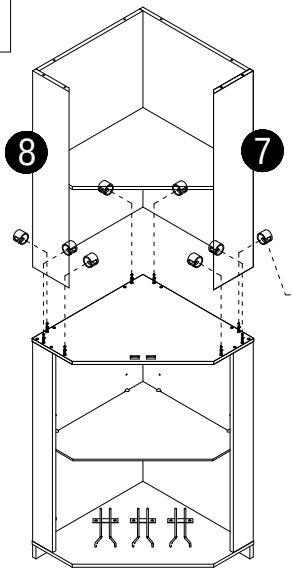

Cx8

14



x10

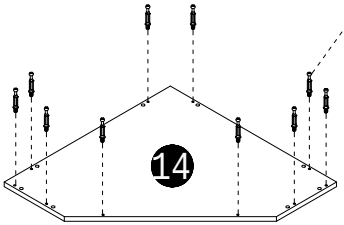

Ax10

15

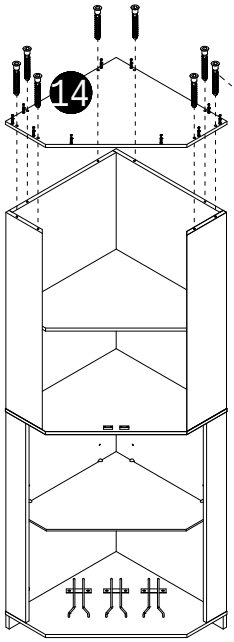

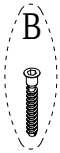

x8

16



x6

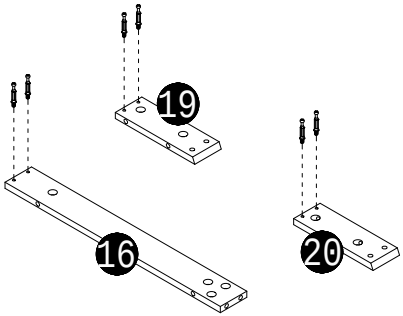

17

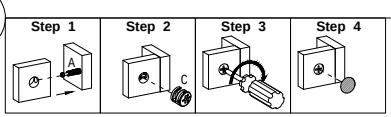



x6

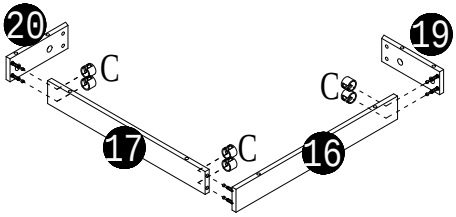

16



x2



x8

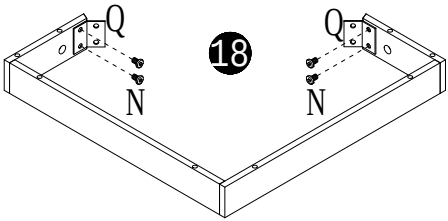

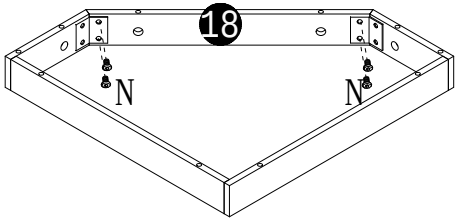

17

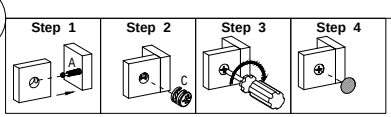

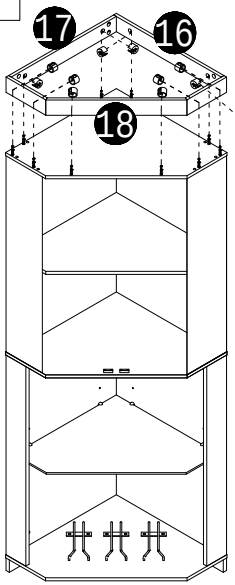



x10

18

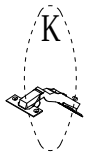

x4



x8



x4

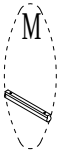

x2

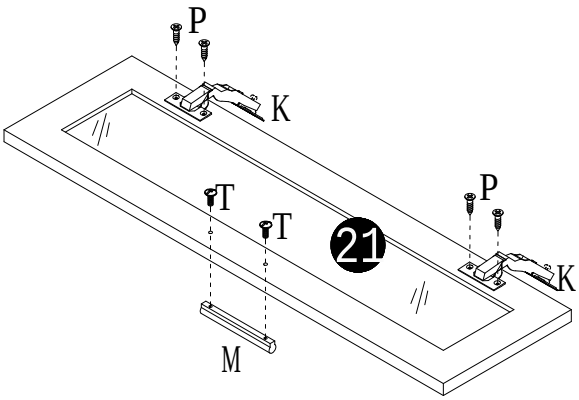

x2

19

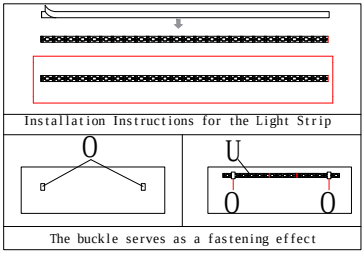



The light strip is installed under the layer board

LED strip passes through the backboard hole

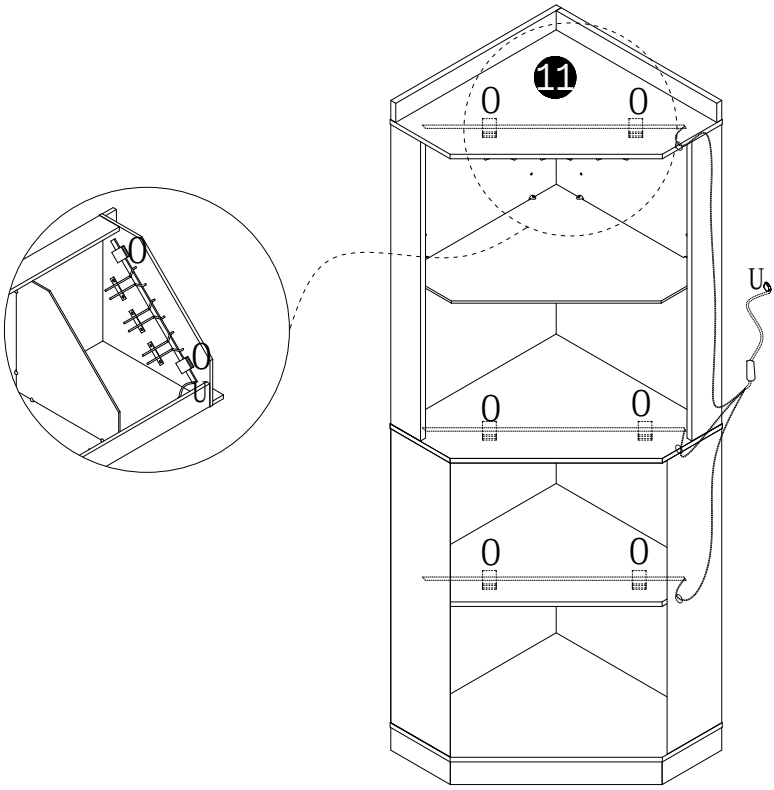

The light strip passes through from the right

20

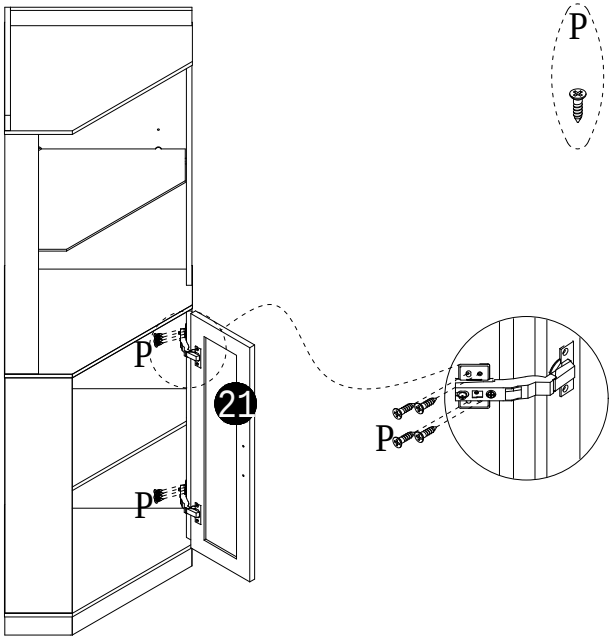

21

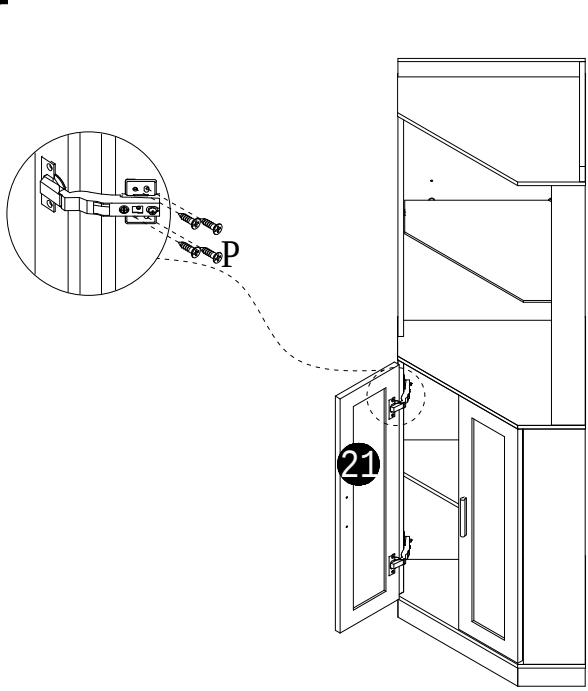

Door hinge adjustment method

Method 1:

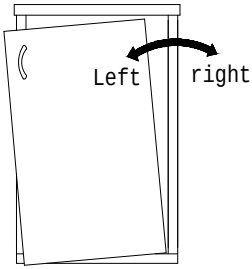

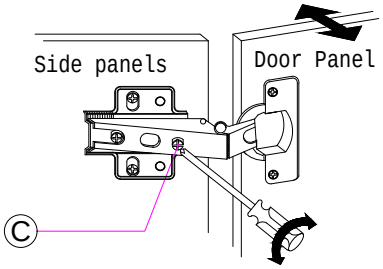

Move the door left or right:
1.Rotate the C screw with a screwdriver clockwise to move the door panel to the left
2.Rotate the C screw counterclockwise with a screwdriver to adjust the door panel to move to the right

Method 2:

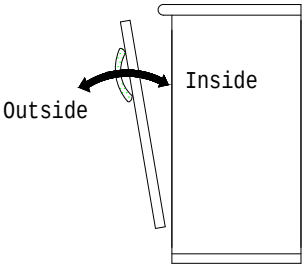

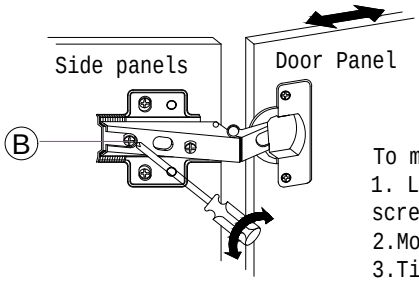

To move the door in or out:
1. Loosen screw B using a screwdriver, as shown in Figure
2.Move door to proper position
3.Tighten the screws again

Method 3:

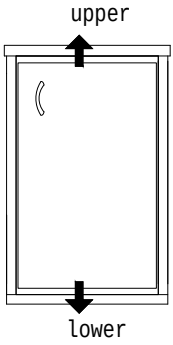

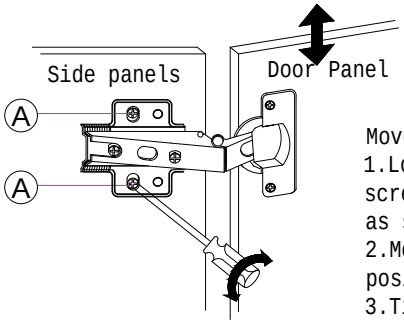

Move the door up and down:
1.Loosen the top and bottom screws A using a screwdriver, as shown in Figure
2.Move the door to the proper position and align the door
3.Tighten the screws again

Install the tipping restraint hard ware

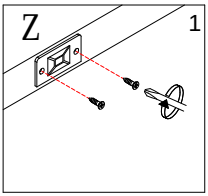

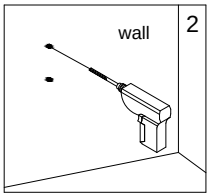

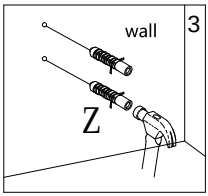

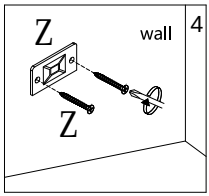

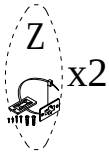



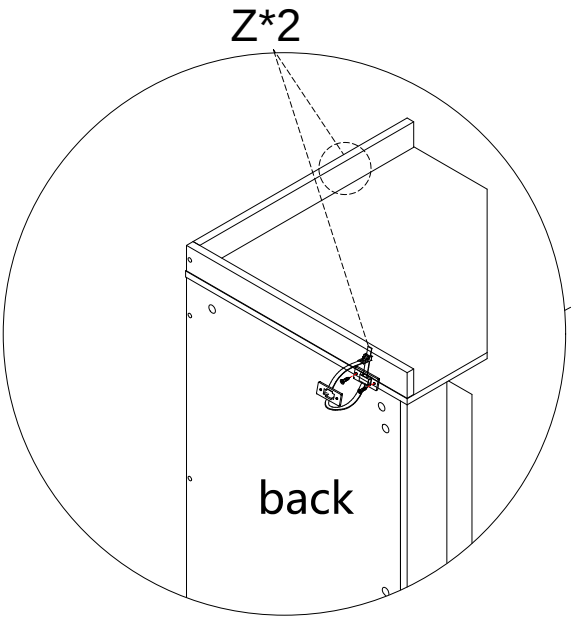

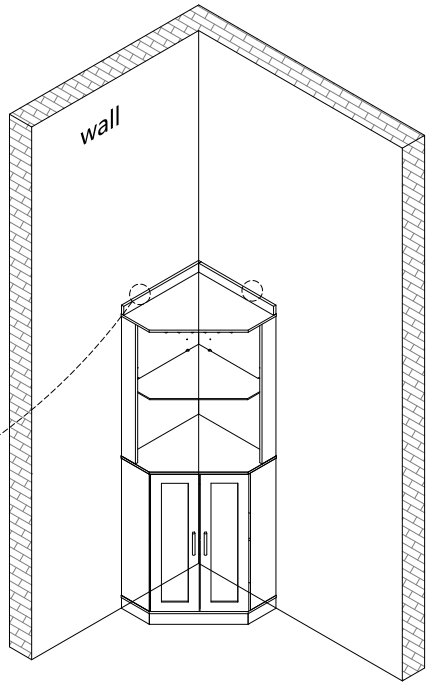

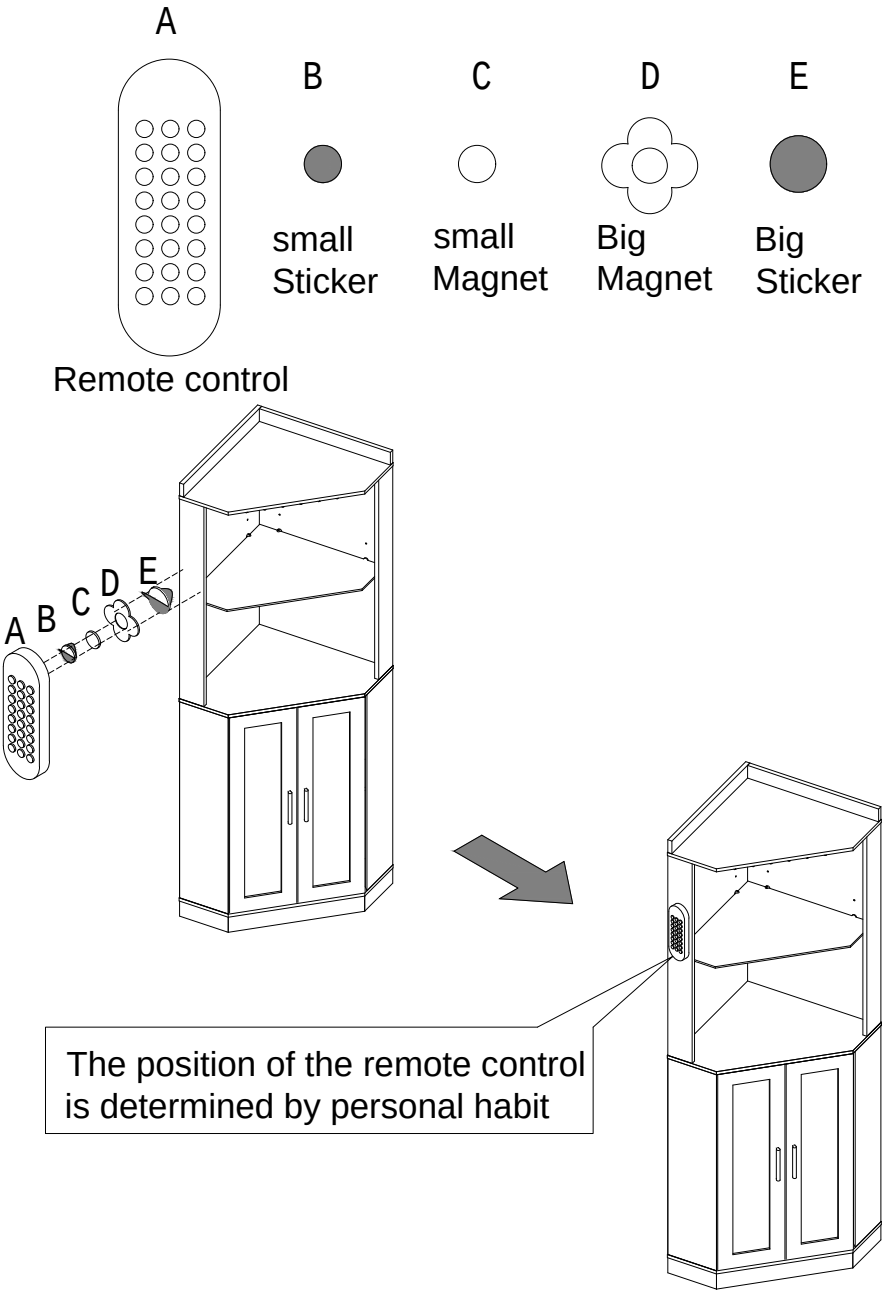
A
B
C
D
E
small Sticker
small Magnet
Big Magnet
Big Sticker
Remote control
A B C D E
The position of the remote control is determined by personal habit



Machine Translated by Google

VEVOR

Upgrade · The Home Creator Way

Plate type wine cabinet

MODEL: DX0202-C250499S-01

Machine Translated by Google

VEVOR
Upgrade·The Home Creator Way

Plate type wine cabinet

MODEL: DX0202-C250499S-01

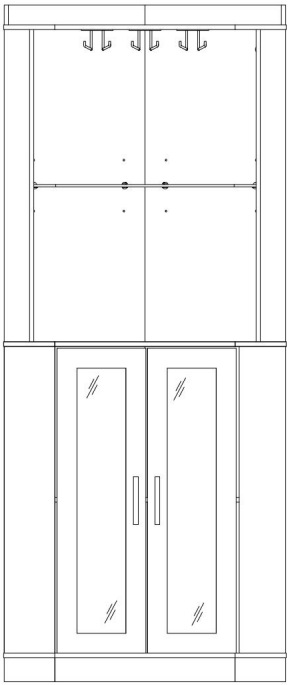

This is the original instruction, please read all manual instructions carefully before operating. VEVOR reserves a clear interpretation of our user manual. The appearance of the product shall be subject to the product you received. Please forgive us that we won't inform you again if there are any technology or software updates on our product.

Machine Translated by Google

SAFETY INSTRUCTIONS

INTRODUCTION

Thank you for purchasing our products. Committed to providing customers with the best quality products and service has always been our lifelong goal. Before using the product, please read this instruction manual carefully to ensure correct use. Keep the instruction manual in a place where the user can find it at any time.

ASSEMBLY PRECAUTIONS

There are many components and accessories in the package. Each component and accessory is labeled with a letter or a number, check carefully before using any of them. Keep them away from children to prevent accidents.

1. Assemble only according to these instructions. Improper assembly may create hazards.
2. Wear ANSI-approved safety goggles and heavy-duty work gloves during assembly.
3. Keep the assembly area clean and well-lit.
4. Keep bystanders out of the area during assembly.
5. Do not assemble if tired or when under the influence of alcohol, drugs or medication.
6. The product capabilities apply to properly and completely assembled products only.
7. If possible, you can use power tools to make assembly easier.
8. The main components of the product is relatively heavy. Please pay attention to safety during installation.
9. The product is not stable during installation, Please do not move it randomly before it is completely installed.
10. For additional information regarding the parts listed in the following.
11. pages, please refer to the Assembly Diagram of this manual. Unwrap and separate all parts in a clean work area.

Machine Translated by Google

***PLEASE BE SURE TO FOLLOW THE INSTALLATION STEPS IN THE MANUAL TO AVOID UNNECSSARY LOSSES CAUSED BY IMPROPER INSTALLATION.**

USE PRECAUTIONS

1) Do not exceed specified weight capacities.
2) Use only on a flat, level, hard, and smooth surface
3) Use as intended only.
4) Inspect before every use; do not use if parts are loose or damaged.

WARNING

Children have died from furniture tipover. To reduce the risk of furniture tipover:

- **NEVER put a TV on this product.**
- **NEVER allow children to stand, climb or hang on drawers,doors,or shelves.**
- **Place heaviest items in the lowest drawers.**

SAVE THIS MANUAL

FCC Information for USB light strings:

CAUTION: Changes or modifications not expressly approved by the party responsible for compliance could void the user's authority to operate the equipment!

This device complies with Part 15 of the FCC Rules. Operation is subject to the following two conditions:

1) This product may cause harmful interference.

2)This product must accept any interference received, including interference that may cause undesired operation.

Machine Translated by Google

WARNING: Changes or modifications to this product not expressly approved by the party.responsible for compliance could void the user's authority to operate the product.

Note: This product has been tested and found to comply with the limits for a Class B digital device pursuant to Part 15 of the FCC Rules, These limits are designed to provide reasonable protection against harmful interference in a residential installation.

This product generates, uses and can radiate radio frequency energy, and if not installed and used in accordance with the instructions, may cause harmful interference to radio communications. However, there is no guarantee that interference will not occur in a particular installation. If this product does cause harmful interference to radio or television reception,which can be determined by turning the product off and on, the user is encouraged to try to correct the interference by one or more of the following measures.

· Reorient or relocate the receiving antenna.

· Increase the distance between the product and receiver.

· Connect the product to an outlet on a circuit different from that to which the receiver is connected.

· Consult the dealer or an experienced radio/TV technician for assistance.

CORRECT DISPOSAL FOR USB LIGHT STRINGS



This product is subject to the provision of european Directive 2012/19/EU. The symbol showing a wheelie bin crossed through indicates that the product requires separate refuse collection in the European Union. This applies to the product and all accessories marked with this symbol. Products marked as such may not be discarded with normal domestic waste, but must be taken to acollection point for recycling electrical and electronic devices.

Machine Translated by Google

Installation des cames et des goupilles

Vissez la goupille dans le trou. Pour un réglage correct des cames, assurez-vous que la flèche sur la came pointe vers le trou de la goupille qu'elle bloque. Bloquez la came en tournant sa tête avec un tournevis jusqu'à ce qu'elle soit serrée. N'utilisez pas de visseuse électrique pour assembler l'appareil.

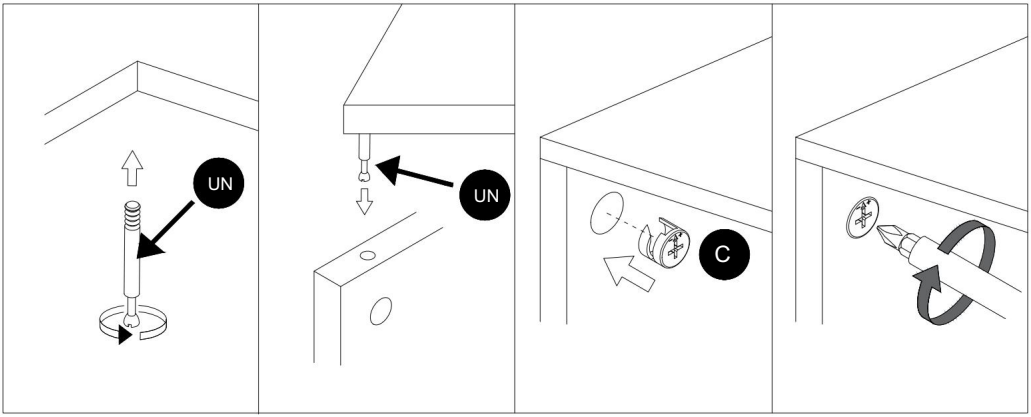

Lisez attentivement chaque étape avant de commencer. Il est très important de suivre les instructions dans l'ordre. Tout manquement à cette séquence entraînera des difficultés de montage.

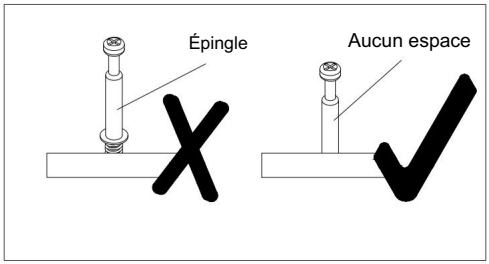

Machine Translated by Google

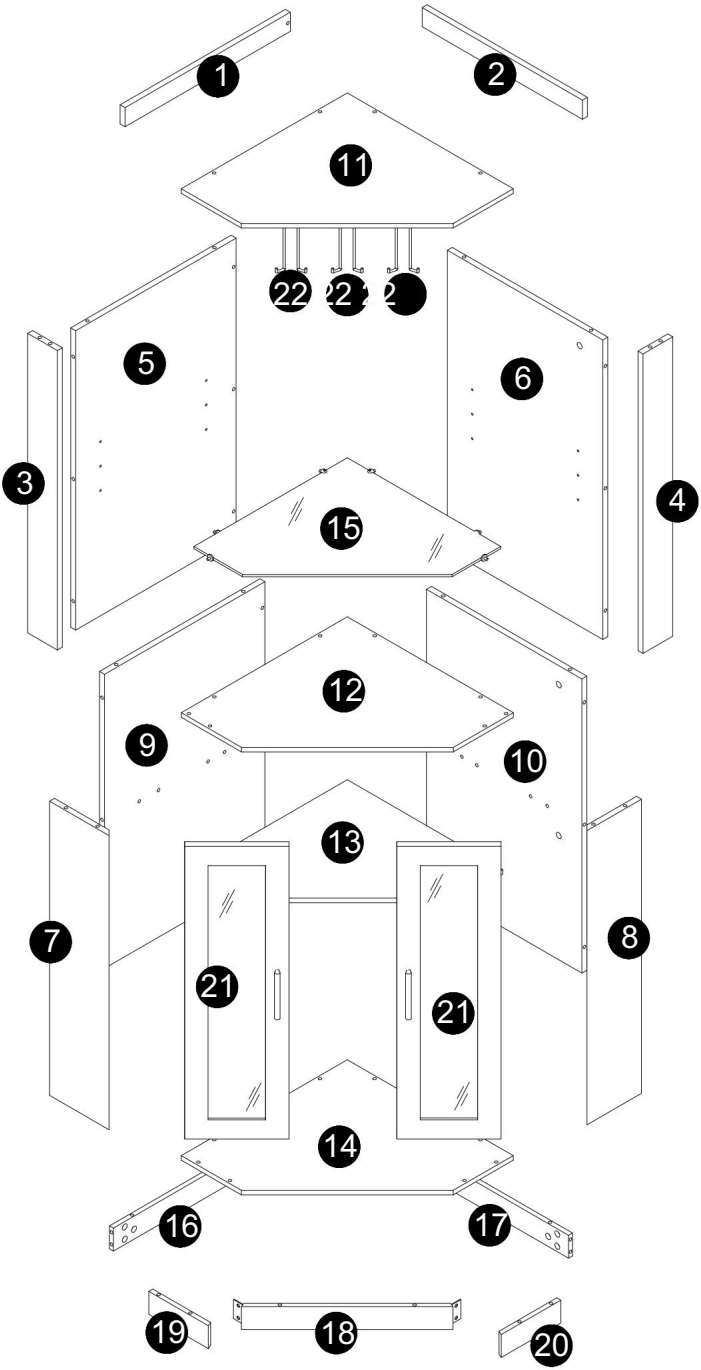

Machine Translated by Google

Liste des pièces et du matériel

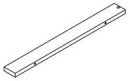 1 pièce	 2 pièces	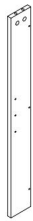 3 pièces
 4 pc	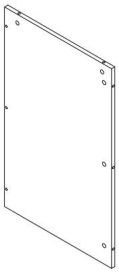 5 pièce	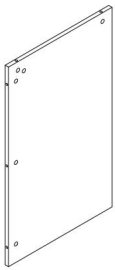 6 1 pièce
 7 pièces	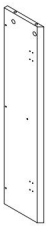 8 1 pièce	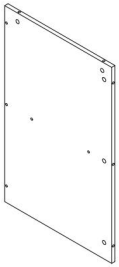 9 pièces
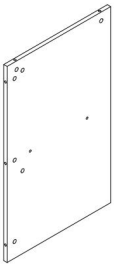 10 pièce	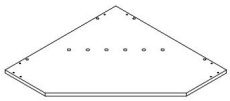 11 pièce	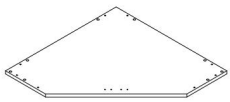 12 pièce

Machine Translated by Google

Liste des pièces et du matériel

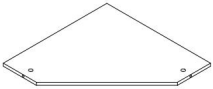 13 1 pièce	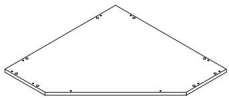 14 1 pièce	 Verre trempé 15 1 pièce
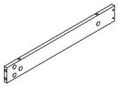 16 1 pièce	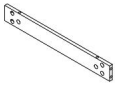 17 1 pièce	 18 1 pièce
 19 1 pièce	 20 1 pièce	 21 2 pièces
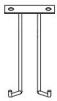 22 3 pièces		

Liste des pièces et du matériel

 Un de 46 pièces	 M7X50MM B 27 pièces	 C 46 pièces	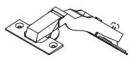 DW135° K 4 pièces
 Ø6X30MM L 4 pièces + 1	 M 2 pièces	 M6X10MM N 14 pièces	 O pièces
 ST3,5 x 12 mm P 28 pièces	 Q pièces	 S 2 pièces	 M4 x 22 mm T 4 pièces
 Et 1 pièce	 W pièces	 X pièces	 2 pièces
 1 pièce		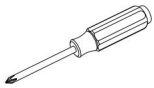	

Machine Translated by Google

1

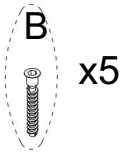

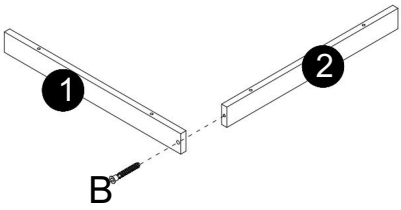

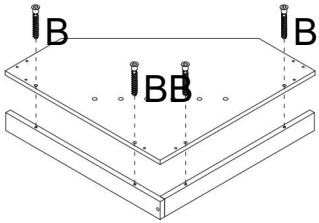

2

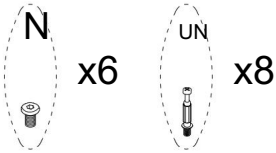

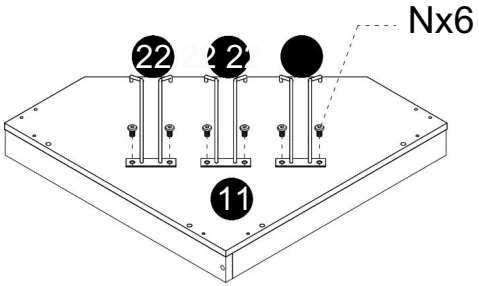

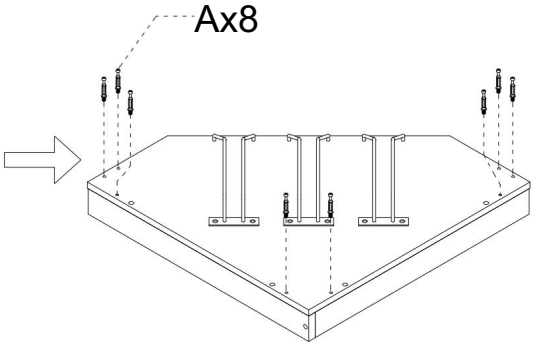

Machine Translated by Google

3



x3

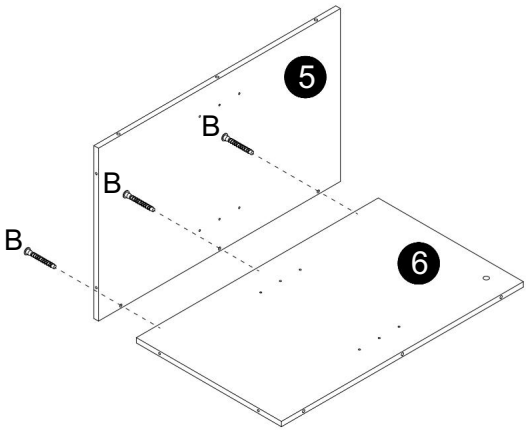

4



x6

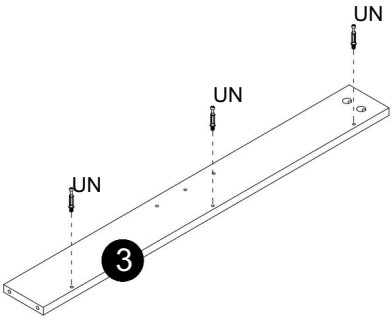

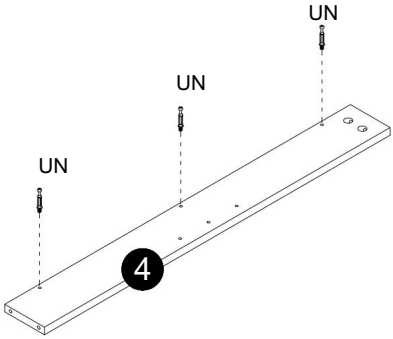

Machine Translated by Google

5

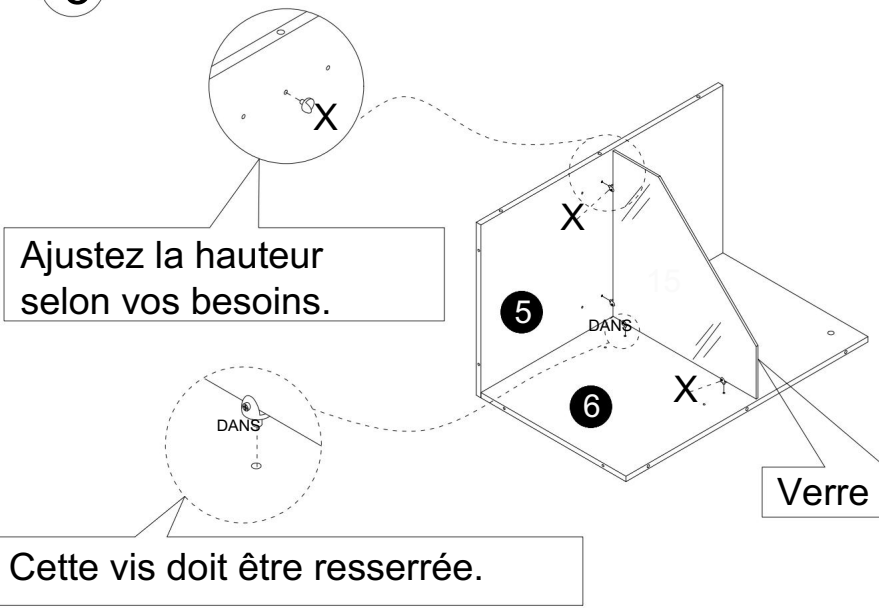

L
x4

Verre trem

V

6

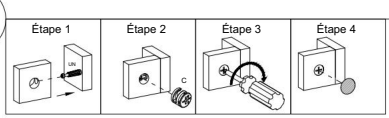

Upgra

C
x6

X
x2

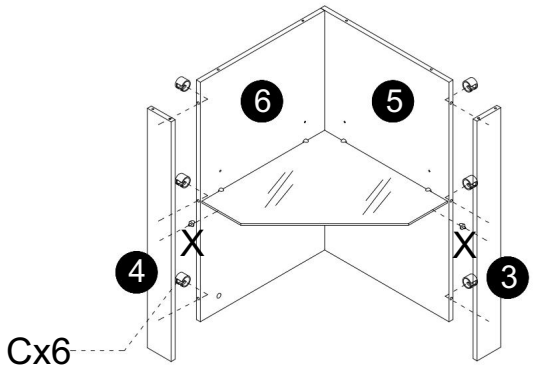

Machine Translated by Google

7

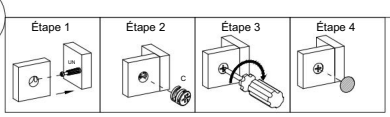



x8

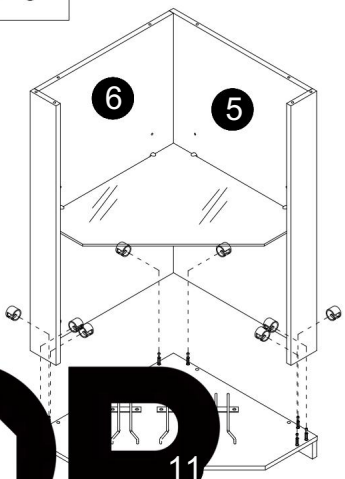

EVOR

11

· The Home Creator Way

8

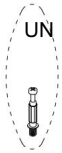

x8

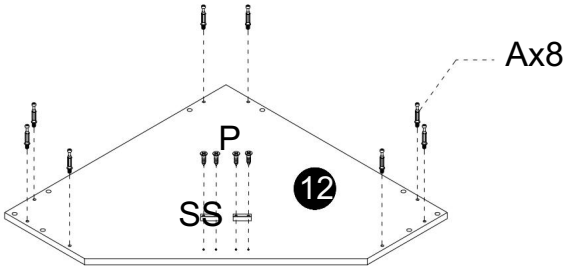



x4

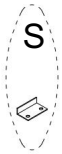

x2

Machine Translated by Google

9

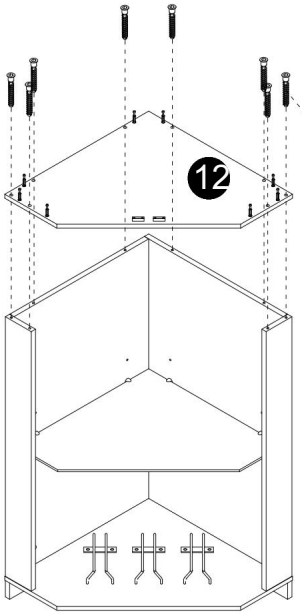

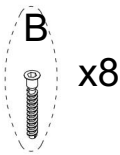

10

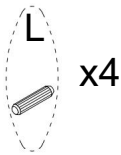

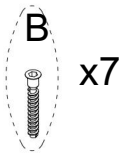

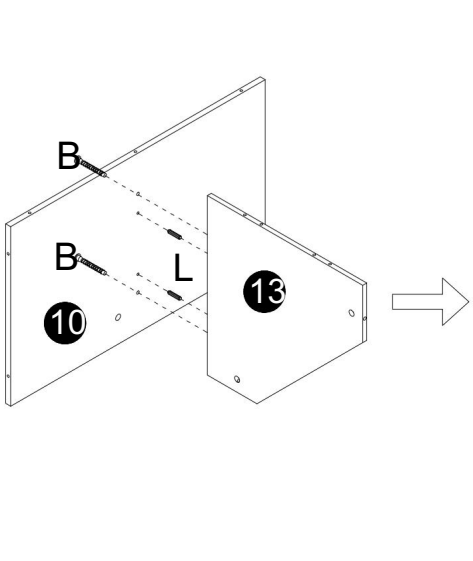

Machine Translated by Google

11

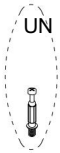

x8

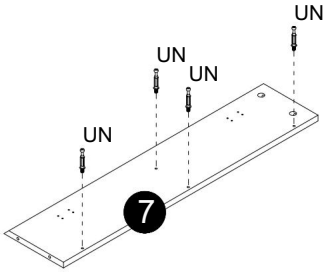

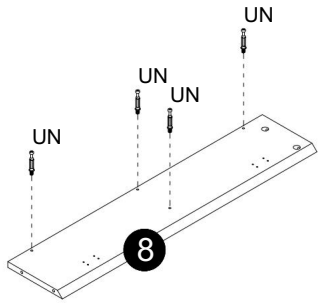

12

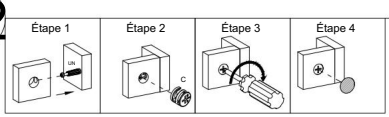



x8

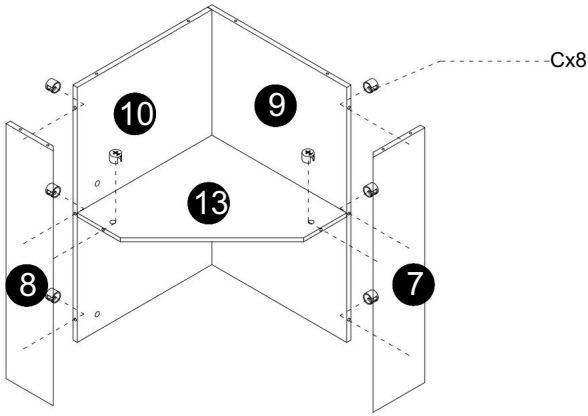

Machine Translated by Google

13

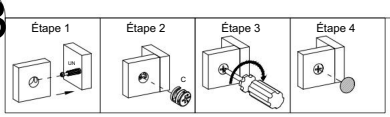



x8

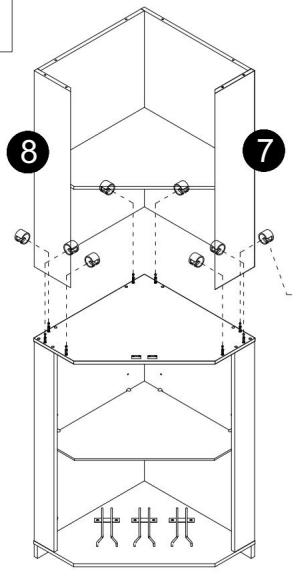

14



x10

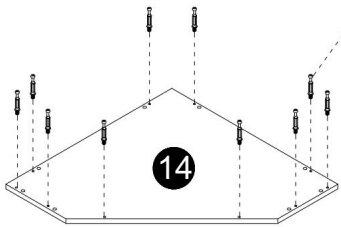

Machine Translated by Google

15

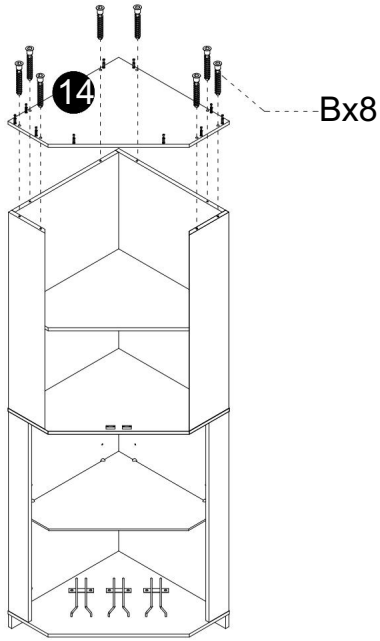

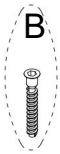

16

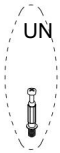

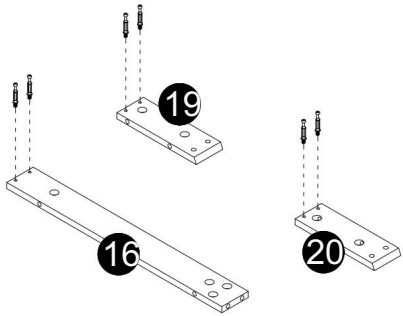

Machine Translated by Google

17

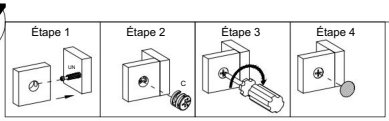



x6

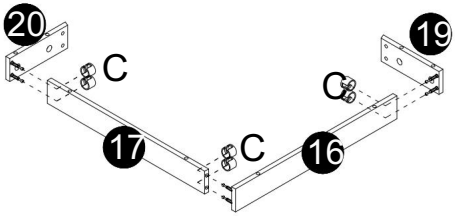

16



x2



x8

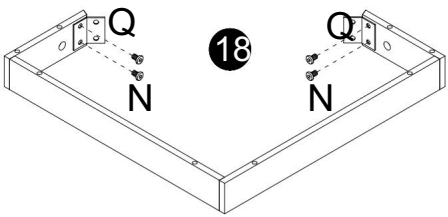

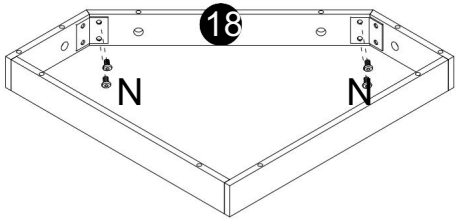

Machine Translated by Google

17

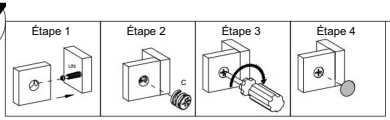

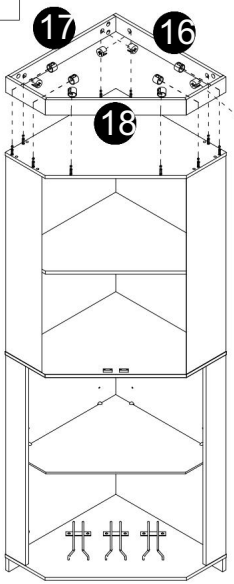



18

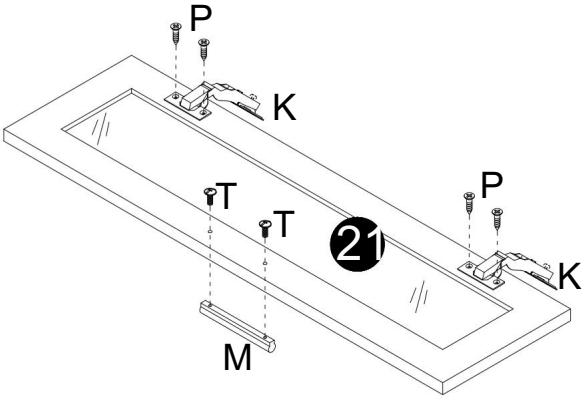









x2

Machine Translated by Google

19



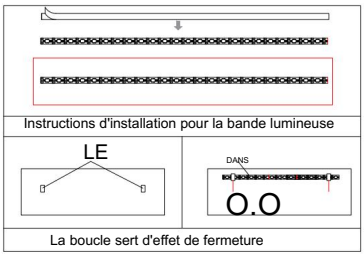

La bande lumineuse est installée sous le panneau de couches.

La bande LED passe par le trou du panneau arrière

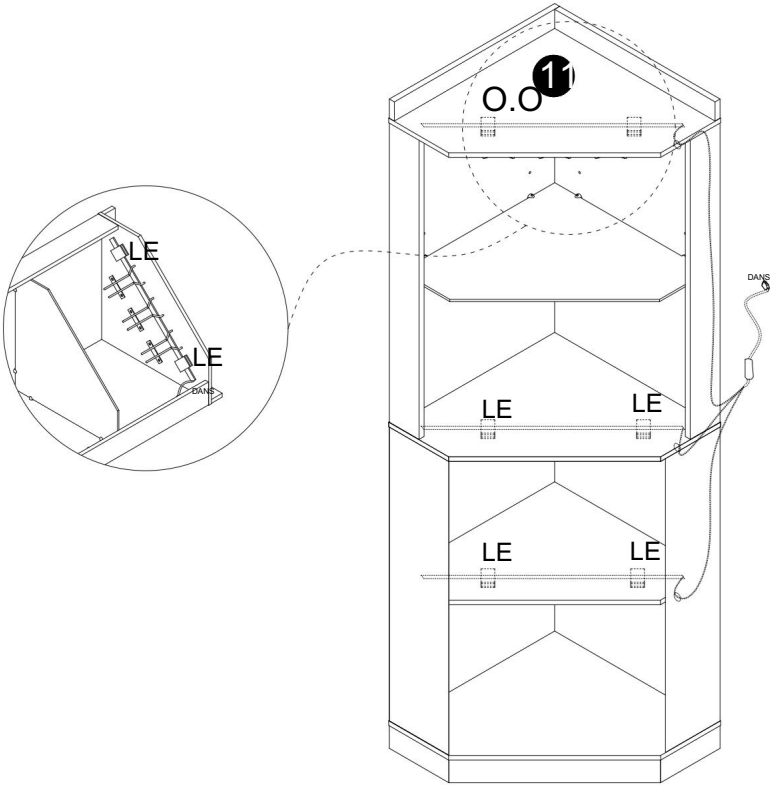

La bande lumineuse passe par la droite.

Machine Translated by Google

20

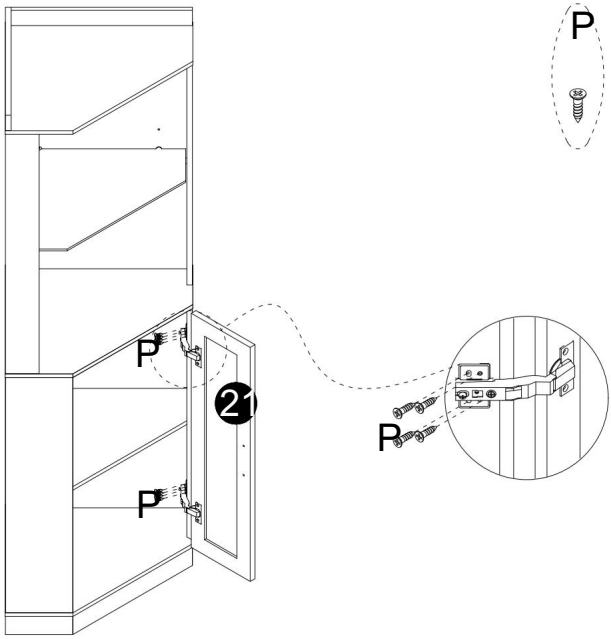

21

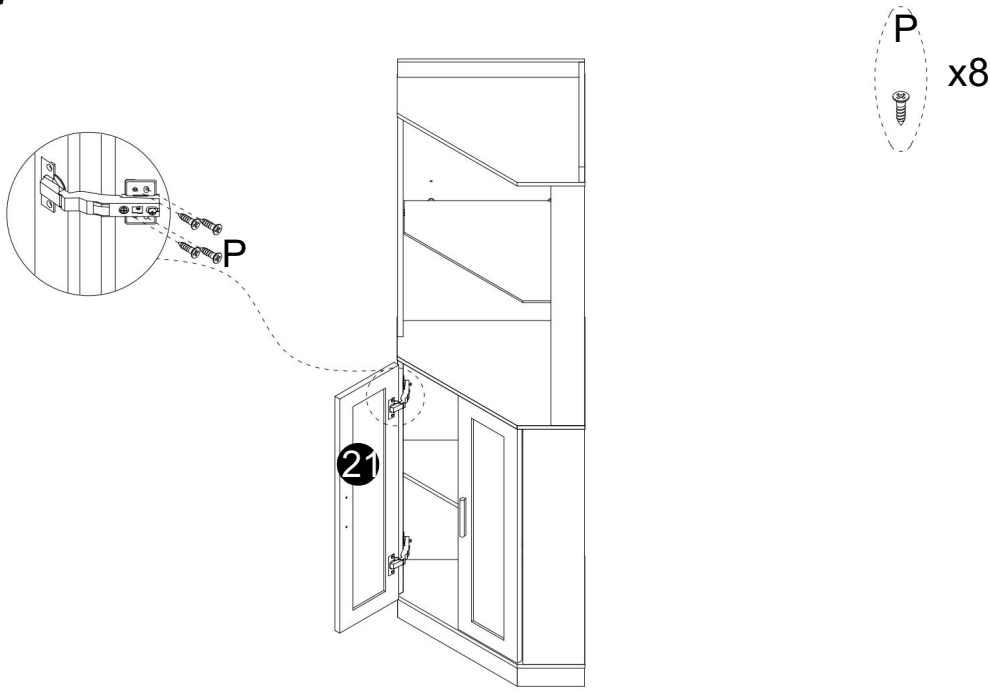

Machine Translated by Google

méthode de réglage des charnières de porte

Méthode 1 :

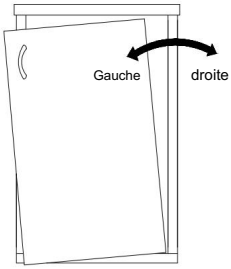

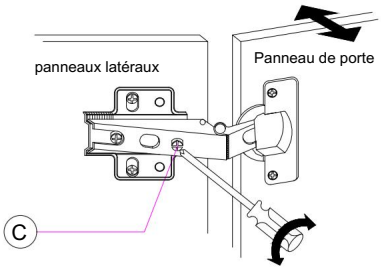

Déplacer la porte à gauche ou à droite : 1. Tournez la vis en C avec un tournevis dans le sens horaire pour déplacer le panneau de porte vers la gauche. 2. Tournez la vis en C.

Tournez dans le sens antihoraire avec un tournevis pour ajuster le panneau de porte et le déplacer vers la droite.

Méthode 2 :

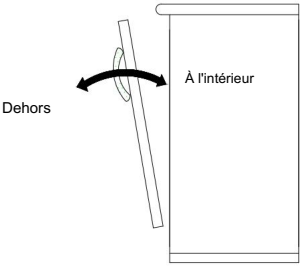

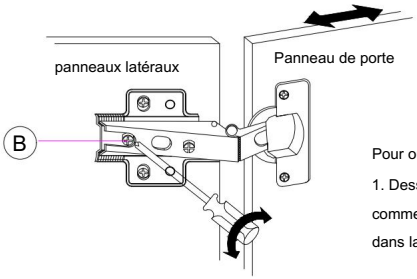

Pour ouvrir ou fermer la porte :

1. Desserrez la vis B à l'aide d'un tournevis, comme indiqué sur la figure 2. 2. Déplacez la porte dans la position souhaitée. 3. Resserrer les vis.

Méthode 3 :

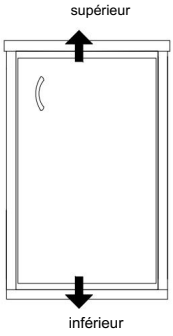

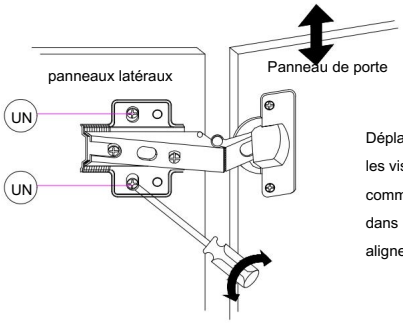

Déplacer la porte de haut en bas : 1. Desserrez les vis A du haut et du bas à l'aide d'un tournevis, comme indiqué sur la figure. 2. Déplacez la porte dans la position souhaitée et alignez-la. 3. Resserrer les vis.

Machine Translated by Google

Installez le dispositif anti-basculement.

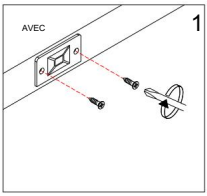

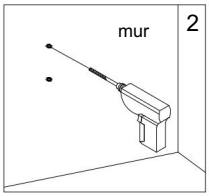

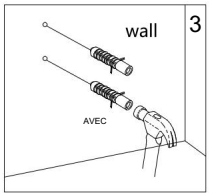

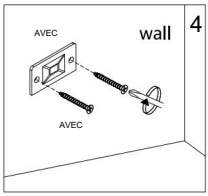

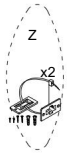



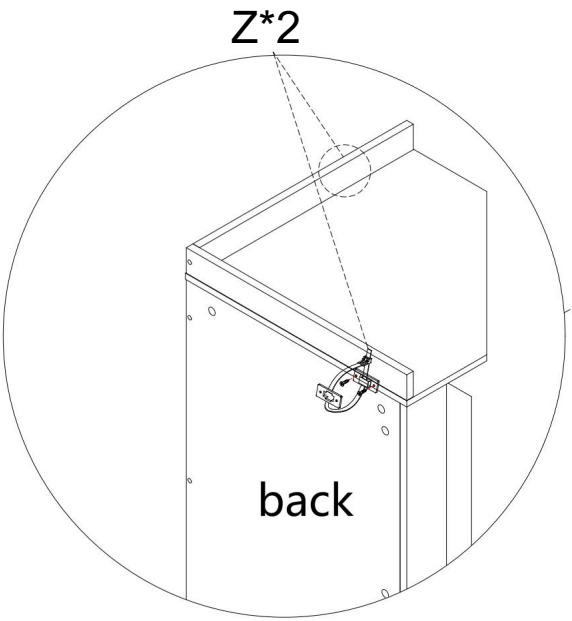

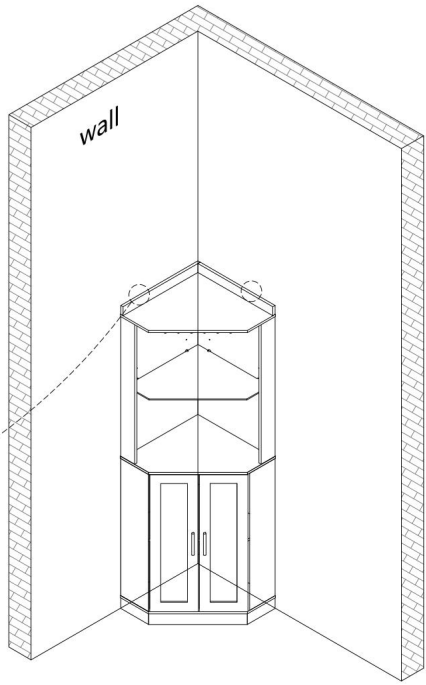

Machine Translated by Google

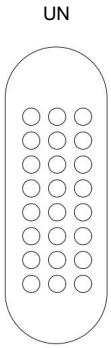

Télécommande

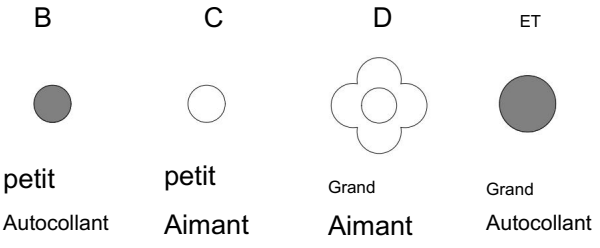

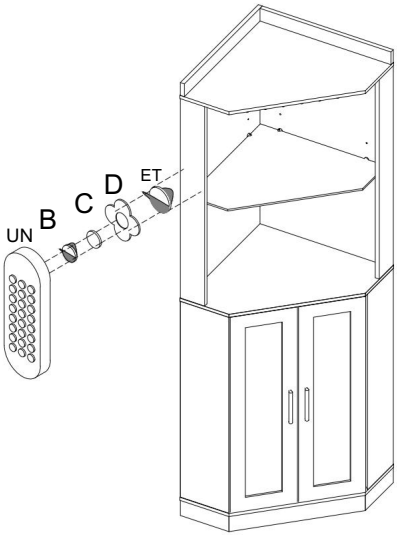

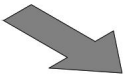

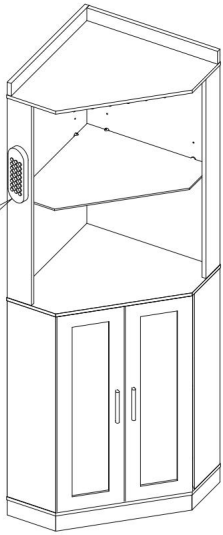

La position de la télécommande
est déterminé par l'habitude personnelle

Machine Translated by Google



Machine Translated by Google

VEVOR

Upgrade · The Home Creator Way

Plate type wine cabinet

MODEL: DX0202-C250499S-01

Machine Translated by Google

VEVOR
Upgrade·The Home Creator Way

Plate type wine cabinet

MODEL: DX0202-C250499S-01

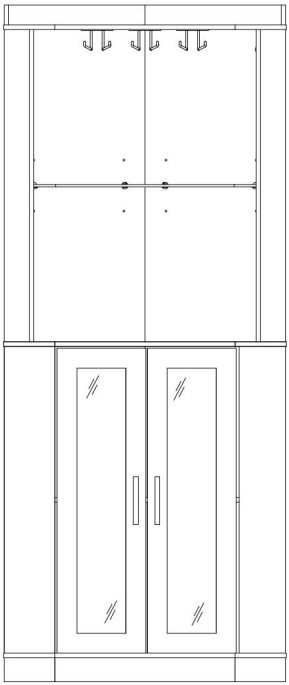

This is the original instruction, please read all manual instructions carefully before operating. VEVOR reserves a clear interpretation of our user manual. The appearance of the product shall be subject to the product you received. Please forgive us that we won't inform you again if there are any technology or software updates on our product.

Machine Translated by Google

SAFETY INSTRUCTIONS

INTRODUCTION

Thank you for purchasing our products. Committed to providing customers with the best quality products and service has always been our lifelong goal. Before using the product, please read this instruction manual carefully to ensure correct use. Keep the instruction manual in a place where the user can find it at any time.

ASSEMBLY PRECAUTIONS

There are many components and accessories in the package. Each component and accessory is labeled with a letter or a number, check carefully before using any of them. Keep them away from children to prevent accidents.

1. Assemble only according to these instructions. Improper assembly may create hazards.
2. Wear ANSI-approved safety goggles and heavy-duty work gloves during assembly.
3. Keep the assembly area clean and well-lit.
4. Keep bystanders out of the area during assembly.
5. Do not assemble if tired or when under the influence of alcohol, drugs or medication.
6. The product capabilities apply to properly and completely assembled products only.
7. If possible, you can use power tools to make assembly easier.
8. The main components of the product is relatively heavy. Please pay attention to safety during installation.
9. The product is not stable during installation, Please do not move it randomly before it is completely installed.
10. For additional information regarding the parts listed in the following.
11. pages, please refer to the Assembly Diagram of this manual. Unwrap and separate all parts in a clean work area.

Machine Translated by Google

***PLEASE BE SURE TO FOLLOW THE INSTALLATION STEPS IN THE MANUAL TO AVOID UNNECSSARY LOSSES CAUSED BY IMPROPER INSTALLATION.**

USE PRECAUTIONS

1) Do not exceed specified weight capacities.
2) Use only on a flat, level, hard, and smooth surface
3) Use as intended only.
4) Inspect before every use; do not use if parts are loose or damaged.

WARNING

Children have died from furniture tipover. To reduce the risk of furniture tipover:

- **NEVER put a TV on this product.**
- **NEVER allow children to stand, climb or hang on drawers,doors,or shelves.**
- **Place heaviest items in the lowest drawers.**

SAVE THIS MANUAL

FCC Information for USB light strings:

CAUTION: Changes or modifications not expressly approved by the party responsible for compliance could void the user's authority to operate the equipment!

This device complies with Part 15 of the FCC Rules. Operation is subject to the following two conditions:

1) This product may cause harmful interference.

2)This product must accept any interference received, including interference that may cause undesired operation.

Machine Translated by Google

WARNING: Changes or modifications to this product not expressly approved by the party.responsible for compliance could void the user's authority to operate the product.

Note: This product has been tested and found to comply with the limits for a Class B digital device pursuant to Part 15 of the FCC Rules, These limits are designed to provide reasonable protection against harmful interference in a residential installation.

This product generates, uses and can radiate radio frequency energy, and if not installed and used in accordance with the instructions, may cause harmful interference to radio communications. However, there is no guarantee that interference will not occur in a particular installation. If this product does cause harmful interference to radio or television reception,which can be determined by turning the product off and on, the user is encouraged to try to correct the interference by one or more of the following measures.

· Reorient or relocate the receiving antenna.

· Increase the distance between the product and receiver.

· Connect the product to an outlet on a circuit different from that to which the receiver is connected.

· Consult the dealer or an experienced radio/TV technician for assistance.

CORRECT DISPOSAL FOR USB LIGHT STRINGS



This product is subject to the provision of european Directive 2012/19/EU. The symbol showing a wheelie bin crossed through indicates that the product requires separate refuse collection in the European Union. This applies to the product and all accessories marked with this symbol. Products marked as such may not be discarded with normal domestic waste, but must be taken to acollection point for recycling electrical and electronic devices.

Machine Translated by Google

Montage von Nocken und Stiften

Schrauben Sie den Stift in die Öffnung. Achten Sie beim Einstellen der Nocken darauf, dass der Pfeil auf der Nocke zur Öffnung des zugehörigen Stifts zeigt. Arretieren Sie die Nocke, indem Sie den Nockenkopf mit einem Schraubendreher festdrehen. Verwenden Sie zum Zusammenbau keinen Akkuschrauber.

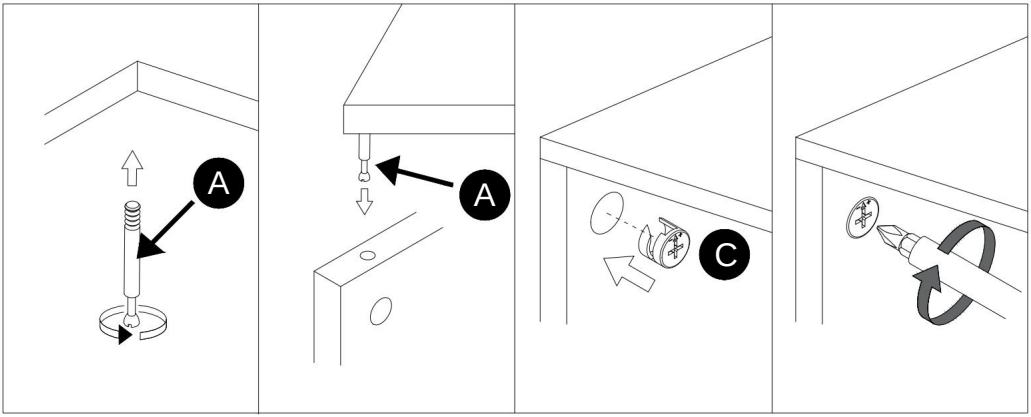

Lesen Sie jeden Schritt sorgfältig durch, bevor Sie beginnen. Es ist sehr wichtig, dass jeder Schritt der Anleitung in der richtigen Reihenfolge ausgeführt wird. Wenn diese Schritte nicht in der vorgegebenen Reihenfolge befolgt werden, treten Montageprobleme auf.

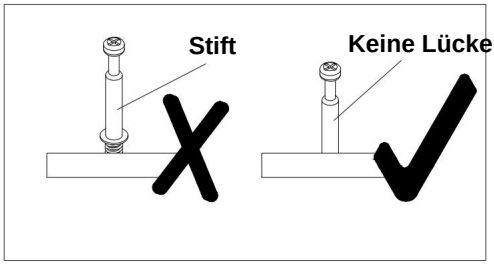

Machine Translated by Google

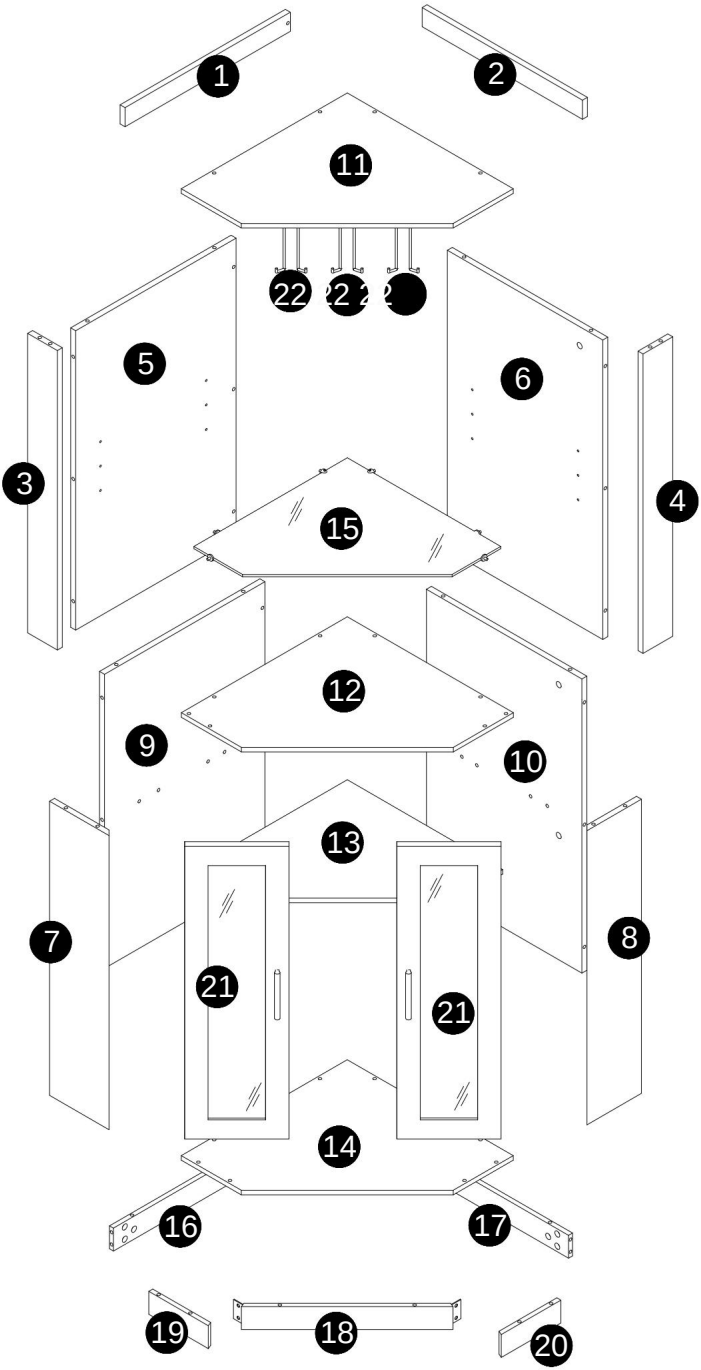

Machine Translated by Google

Teile- und Hardwareliste

 1 Stück	 2 Stück	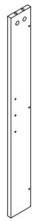 3 Stück
 4 Stück	 5 Stück	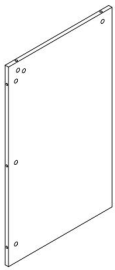 6 1 Stück
 7 Stück	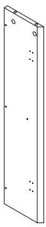 8 1 Stück	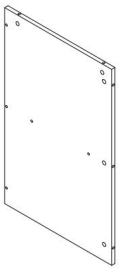 9 Stück
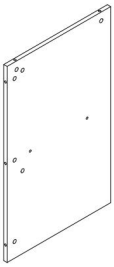 10 Stück	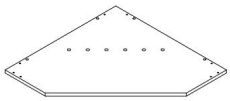 11 Stück	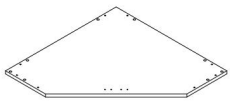 12 Stück

Machine Translated by Google

Teile- und Hardwareliste

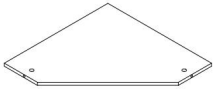 13 1 Stück	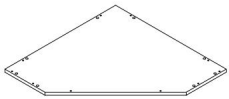 14 1 Stück	 Gehärtetes Glas 15 1 Stück
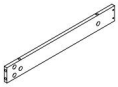 16 1 Stück	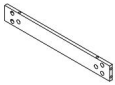 17 1 Stück	 18 1 Stück
 19 1 Stück	 20 6 Stück	 21 2 Stück
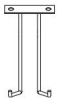 22 3 Stück		

Teile- und Hardwareliste

 A 46 Stück	 M7x50 mm B 27 Stück	 C 46 Stück	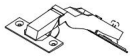 DW135° K 4 Stück
 Ø6 x 30 mm L 4 Stück + 1	 M 2 Stück	 M6 x 10 mm N 14 Stück	 O 6 Stück
 ST3,5 x 12 mm P 28 Stück	 Q 2 Stück	 S 2 Stück	 M4 x 22 mm T 4 Stück
 Und 1 Stück	 W Stück	 X 2 Stück	 Mit 2 Stück
 1 Stück		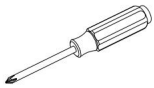	

Machine Translated by Google

1



x5

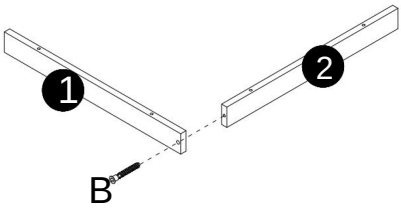

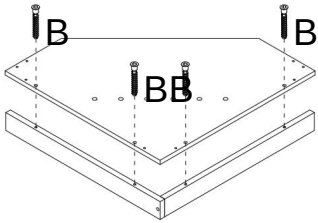

2



x6

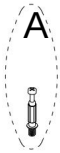

x8

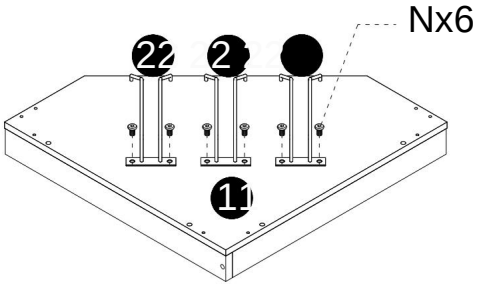

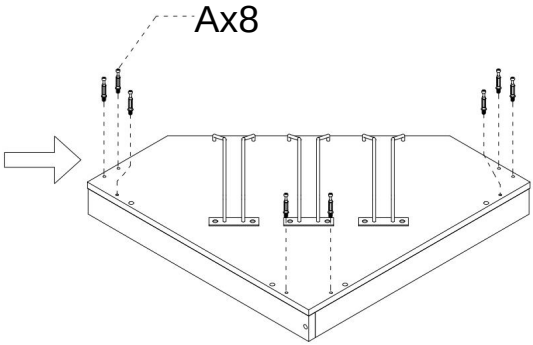

Machine Translated by Google

3



x3

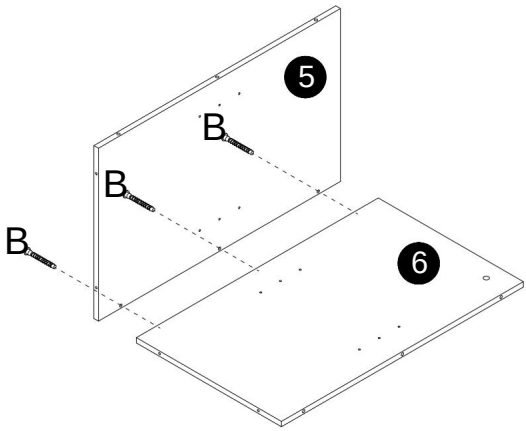

4

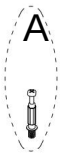

x6

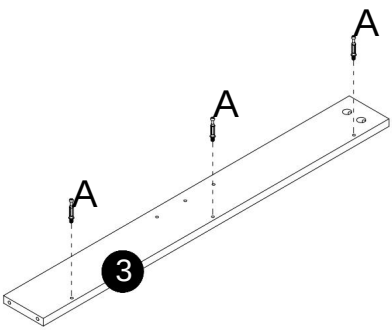

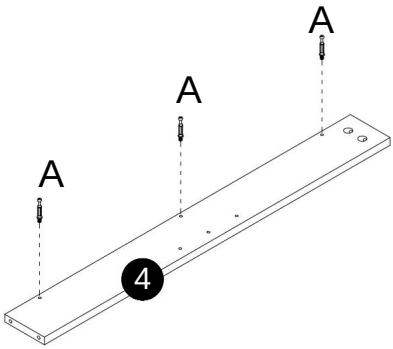

Machine Translated by Google

5

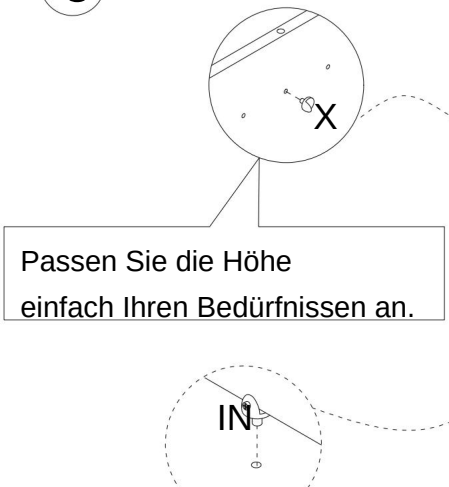

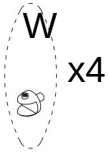

Gehärtetes Gl

V

Upgrad

6

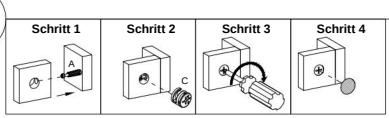

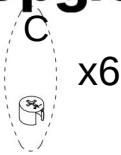

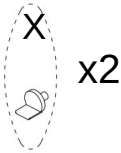

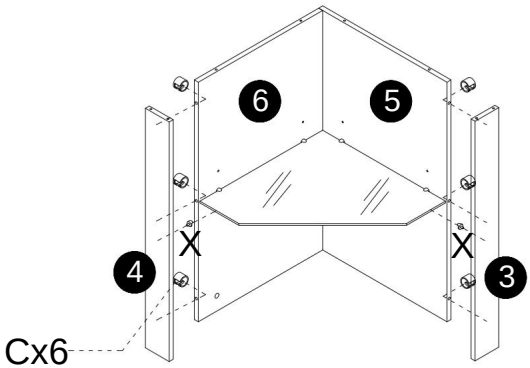

Machine Translated by Google

7

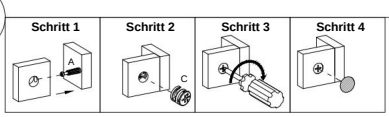



x8

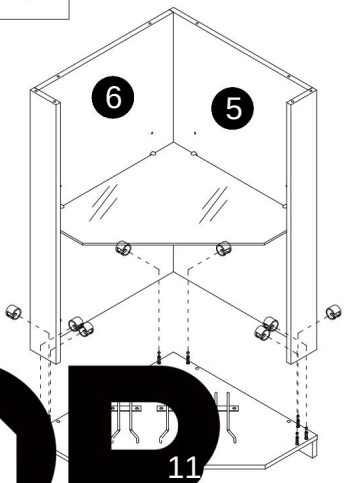

EVOR

· The Home Creator Way

8

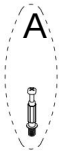

x8

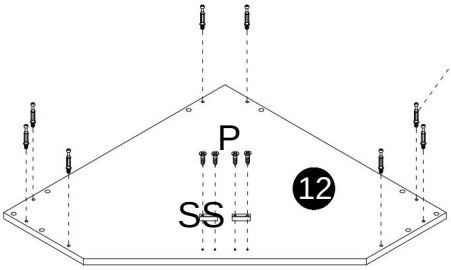



x4



x2

Machine Translated by Google

9

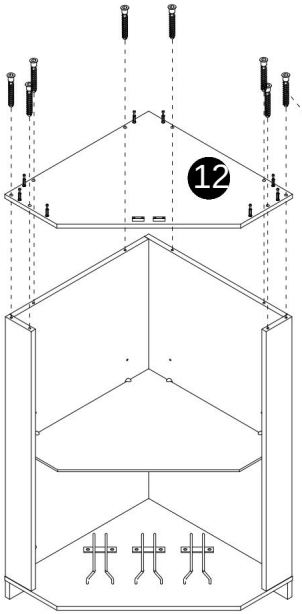



10

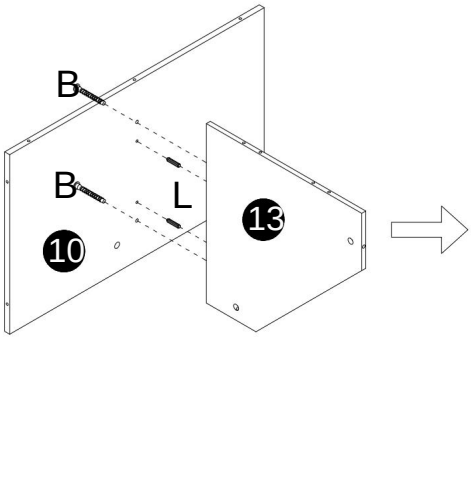





Machine Translated by Google

11

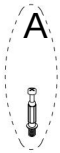

x8

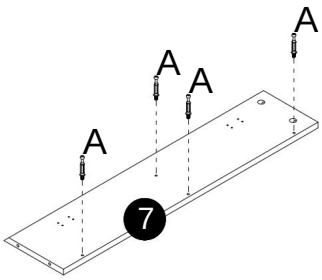

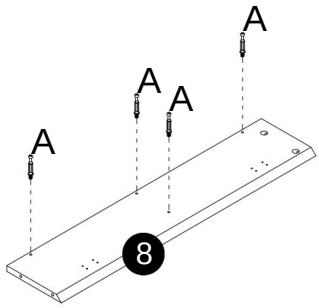

12

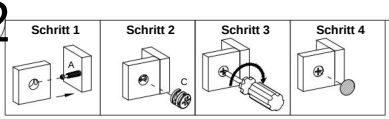



x8

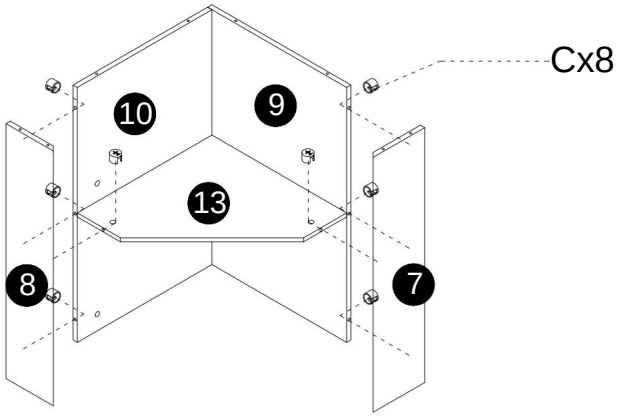

Machine Translated by Google

13

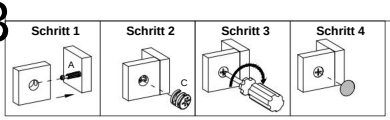



x8

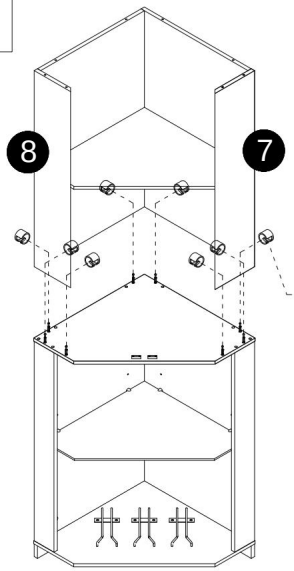

Cx8

14



x10

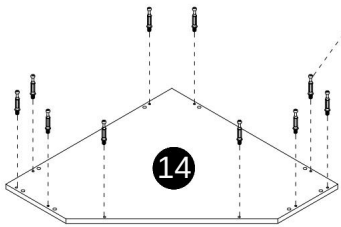

Ax10

Machine Translated by Google

15

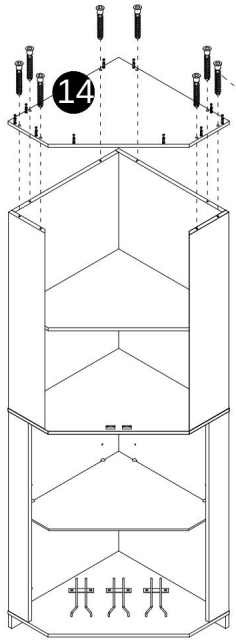



16

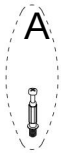

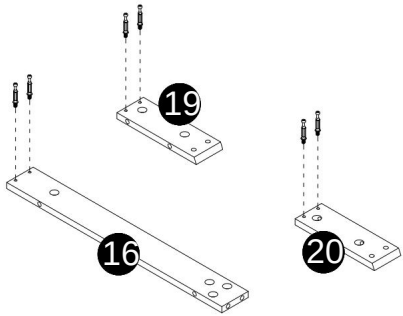

17

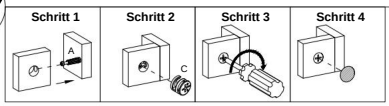
Schritt 1
Schritt 2
Schritt 3
Schritt 4
A
C


C

x6

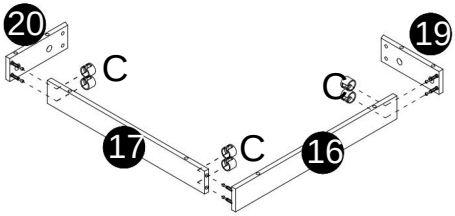
20
19
C
C
17
C
16

16


Q

x2


N

x8

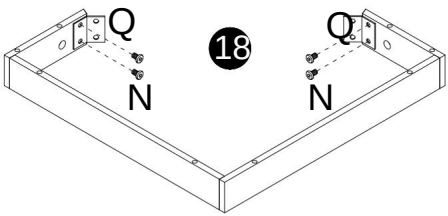
Q
18
Q
N
N

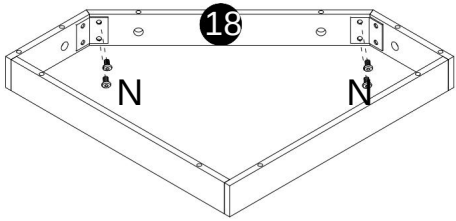
18
N
N

Machine Translated by Google

17

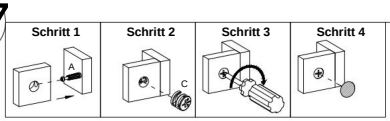

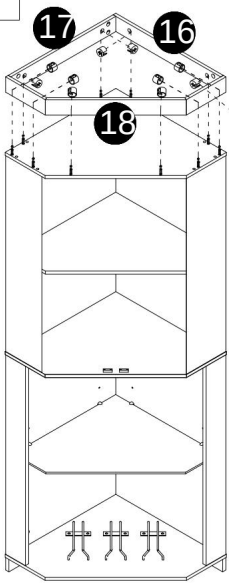

Cx10



x10

18



x4



x8



x4



x2

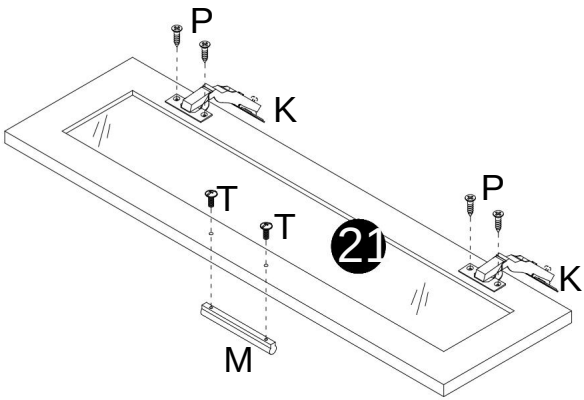

x2

Machine Translated by Google

19

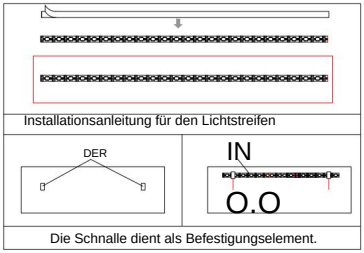



Der Lichtstreifen ist unter der Trägerplatte installiert.

Der LED-Streifen wird durch das Loch in der Rückwand geführt.

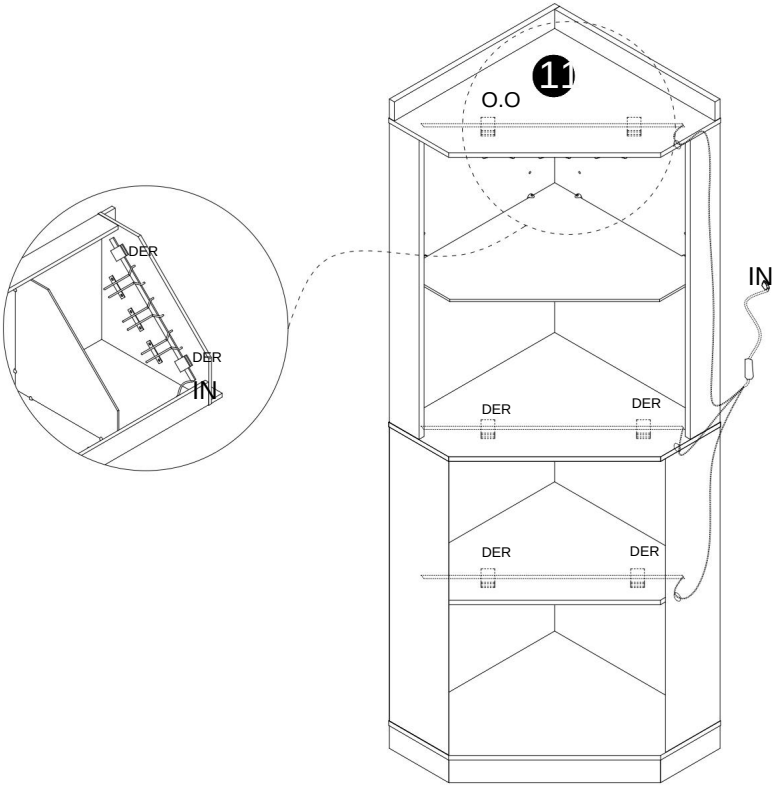

Der Lichtstreifen verläuft von rechts durch.

Machine Translated by Google

20

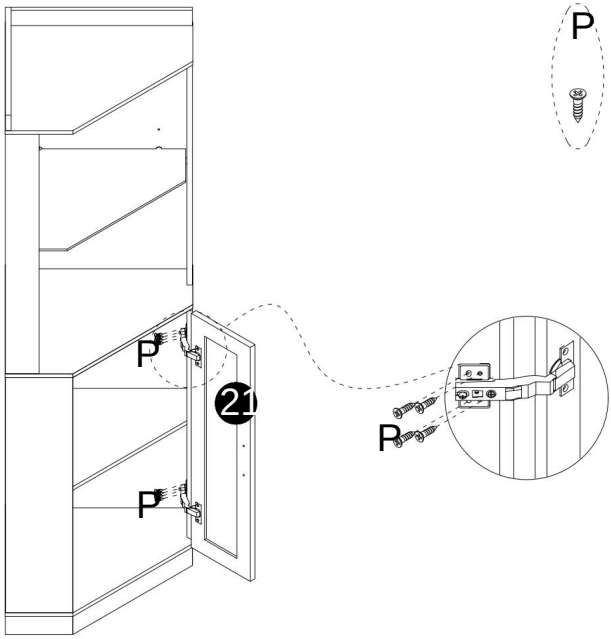

21

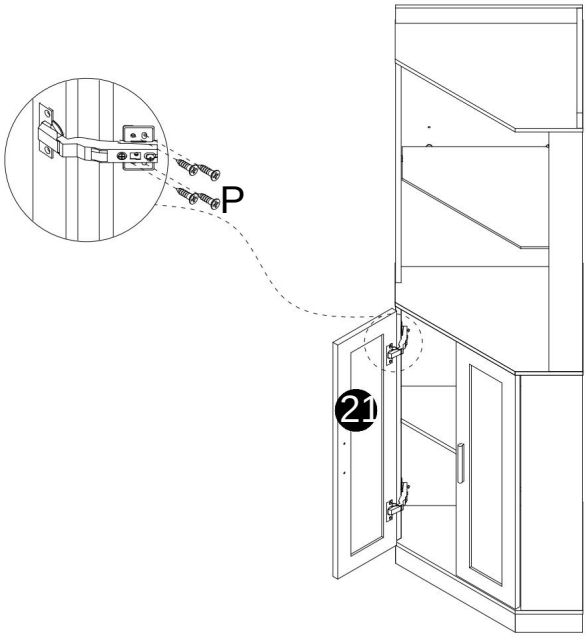

Machine Translated by Google

Methode zur Justierung von Türscharnieren

Methode 1:

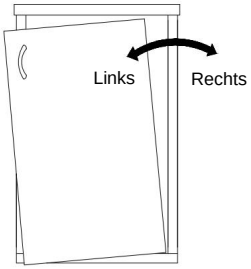

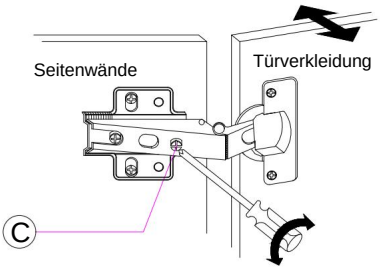

Tür nach links oder rechts bewegen: 1. Die C-Schraube mit einem Schraubendreher im Uhrzeigersinn drehen, um das Türblatt nach links zu bewegen. 2. Die C-Schraube drehen Mit einem Schraubendreher gegen den Uhrzeigersinn drehen, um die Türverkleidung nach rechts zu bewegen.

Methode 2:

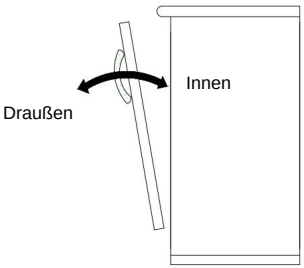

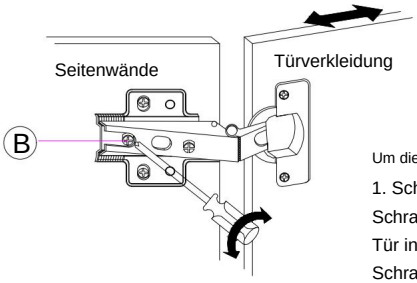

Um die Tür nach innen oder außen zu bewegen: 1. Schraube B mit einem Schraubendreher lösen (siehe Abbildung). 2. Tür in die richtige Position bringen. 3. Schrauben wieder festziehen.

Methode 3:

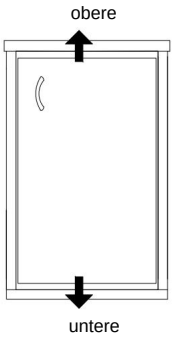

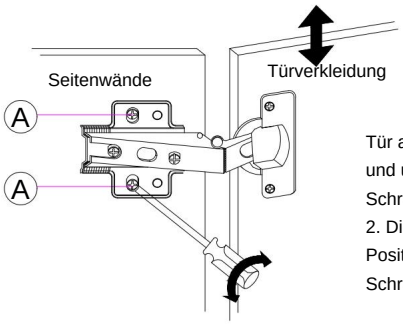

Tür auf und ab bewegen: 1. Die oberen und unteren Schrauben A mit einem Schraubendreher lösen (siehe Abbildung). 2. Die Tür in die richtige Position bringen und ausrichten. 3. Die Schrauben wieder festziehen.

Machine Translated by Google

Montieren Sie die Kippsicherungs-Hardware.

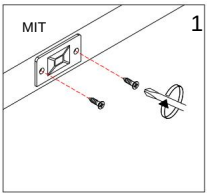

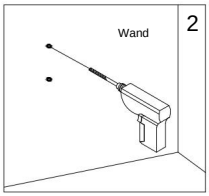

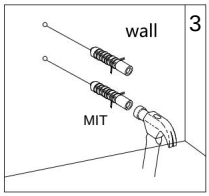

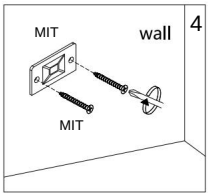





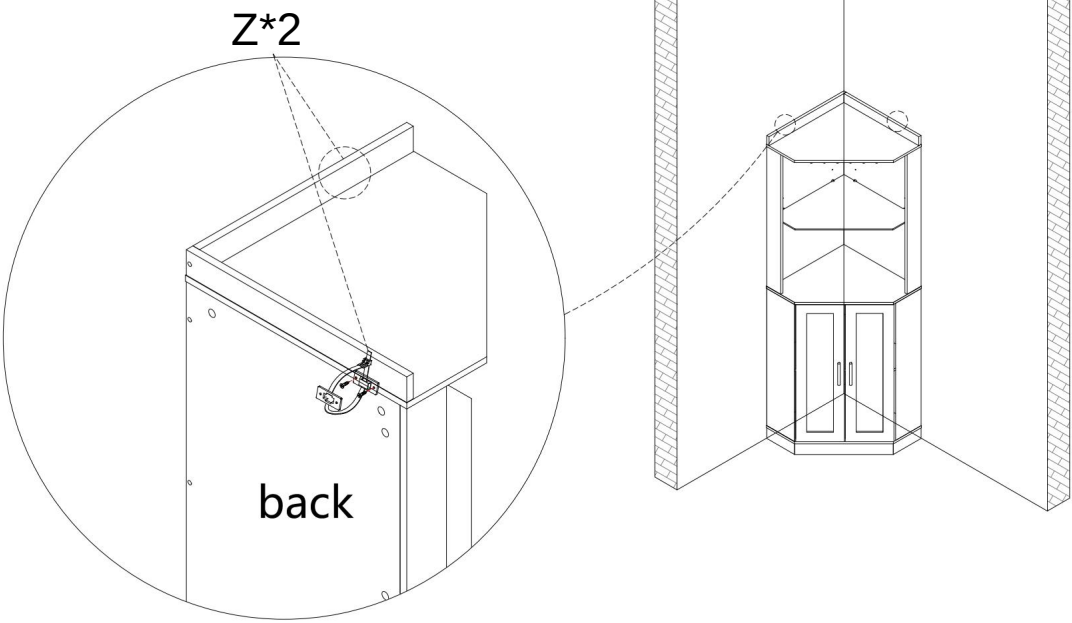

Machine Translated by Google

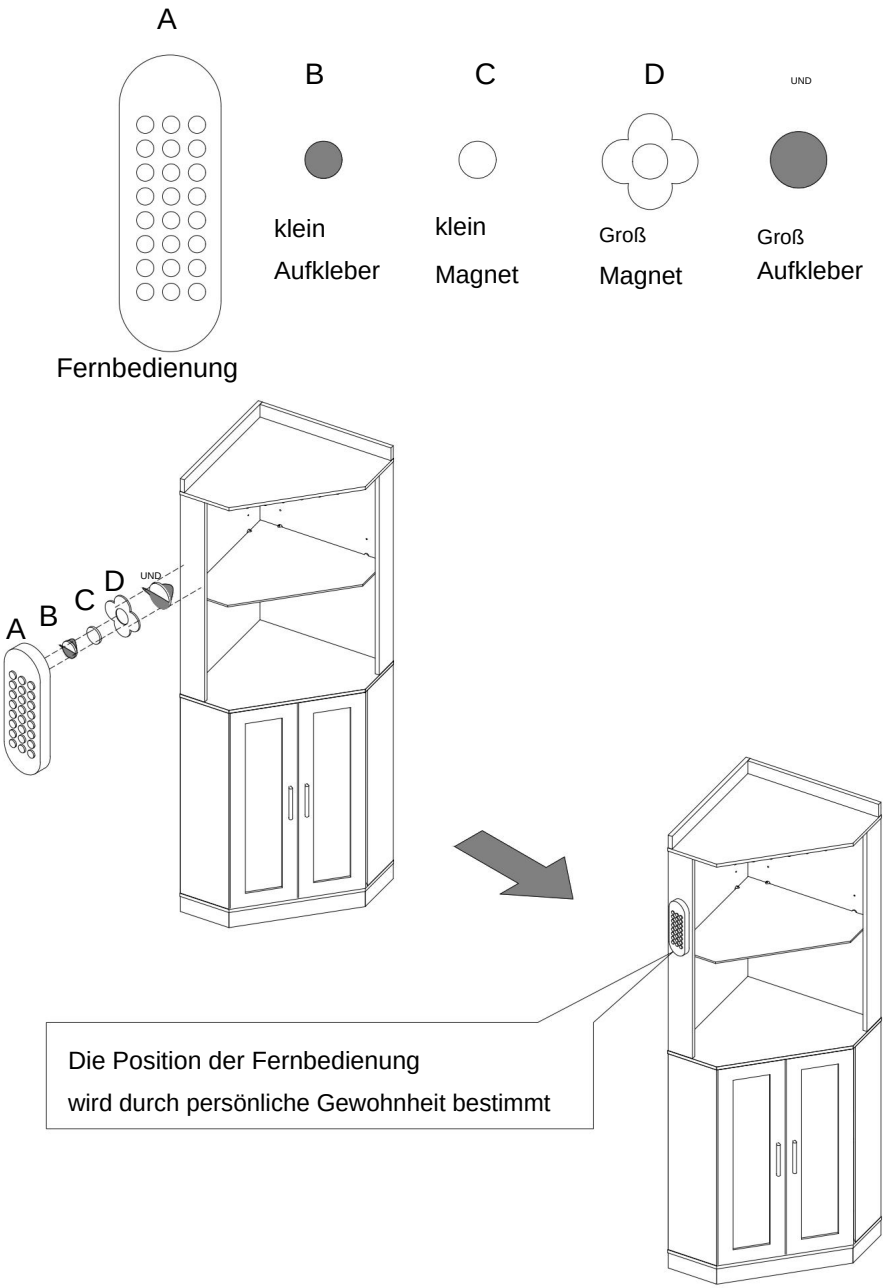

Machine Translated by Google



Machine Translated by Google

VEVOR

Upgrade · The Home Creator Way

Plate type wine cabinet

MODEL: DX0202-C250499S-01

Machine Translated by Google

VEVOR
Upgrade·The Home Creator Way

Plate type wine cabinet

MODEL: DX0202-C250499S-01

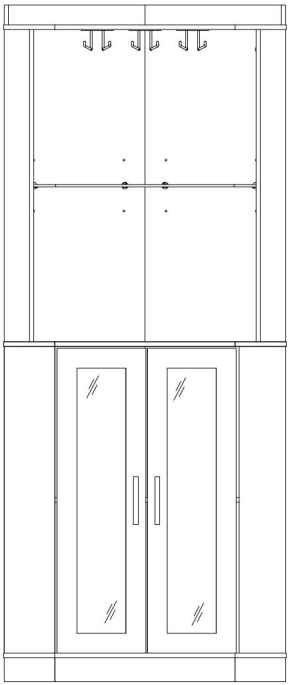

This is the original instruction, please read all manual instructions carefully before operating. VEVOR reserves a clear interpretation of our user manual. The appearance of the product shall be subject to the product you received. Please forgive us that we won't inform you again if there are any technology or software updates on our product.

Machine Translated by Google

SAFETY INSTRUCTIONS

INTRODUCTION

Thank you for purchasing our products. Committed to providing customers with the best quality products and service has always been our lifelong goal. Before using the product, please read this instruction manual carefully to ensure correct use. Keep the instruction manual in a place where the user can find it at any time.

ASSEMBLY PRECAUTIONS

There are many components and accessories in the package. Each component and accessory is labeled with a letter or a number, check carefully before using any of them. Keep them away from children to prevent accidents.

1. Assemble only according to these instructions. Improper assembly may create hazards.
2. Wear ANSI-approved safety goggles and heavy-duty work gloves during assembly.
3. Keep the assembly area clean and well-lit.
4. Keep bystanders out of the area during assembly.
5. Do not assemble if tired or when under the influence of alcohol, drugs or medication.
6. The product capabilities apply to properly and completely assembled products only.
7. If possible, you can use power tools to make assembly easier.
8. The main components of the product is relatively heavy. Please pay attention to safety during installation.
9. The product is not stable during installation, Please do not move it randomly before it is completely installed.
10. For additional information regarding the parts listed in the following.
11. pages, please refer to the Assembly Diagram of this manual. Unwrap and separate all parts in a clean work area.

Machine Translated by Google

***PLEASE BE SURE TO FOLLOW THE INSTALLATION STEPS IN THE MANUAL TO AVOID UNNECSSARY LOSSES CAUSED BY IMPROPER INSTALLATION.**

USE PRECAUTIONS

1) Do not exceed specified weight capacities.
2) Use only on a flat, level, hard, and smooth surface
3) Use as intended only.
4) Inspect before every use; do not use if parts are loose or damaged.

WARNING

Children have died from furniture tipover. To reduce the risk of furniture tipover:

- **NEVER put a TV on this product.**
- **NEVER allow children to stand, climb or hang on drawers,doors,or shelves.**
- **Place heaviest items in the lowest drawers.**

SAVE THIS MANUAL

FCC Information for USB light strings:

CAUTION: Changes or modifications not expressly approved by the party responsible for compliance could void the user's authority to operate the equipment!

This device complies with Part 15 of the FCC Rules. Operation is subject to the following two conditions:

1) This product may cause harmful interference.

2)This product must accept any interference received, including interference that may cause undesired operation.

Machine Translated by Google

WARNING: Changes or modifications to this product not expressly approved by the party.responsible for compliance could void the user's authority to operate the product.

Note: This product has been tested and found to comply with the limits for a Class B digital device pursuant to Part 15 of the FCC Rules, These limits are designed to provide reasonable protection against harmful interference in a residential installation.

This product generates, uses and can radiate radio frequency energy, and if not installed and used in accordance with the instructions, may cause harmful interference to radio communications. However, there is no guarantee that interference will not occur in a particular installation. If this product does cause harmful interference to radio or television reception,which can be determined by turning the product off and on, the user is encouraged to try to correct the interference by one or more of the following measures.

· Reorient or relocate the receiving antenna.

· Increase the distance between the product and receiver.

· Connect the product to an outlet on a circuit different from that to which the receiver is connected.

· Consult the dealer or an experienced radio/TV technician for assistance.

CORRECT DISPOSAL FOR USB LIGHT STRINGS



This product is subject to the provision of european Directive 2012/19/EU. The symbol showing a wheelie bin crossed through indicates that the product requires separate refuse collection in the European Union. This applies to the product and all accessories marked with this symbol. Products marked as such may not be discarded with normal domestic waste, but must be taken to acollection point for recycling electrical and electronic devices.

Machine Translated by Google

Installazione di camme e perni

Avvitare il perno nel foro. Per impostare correttamente le camme, assicurarsi che la freccia sulla camma si apra verso il foro del perno che si sta bloccando. Bloccare la camma ruotando la testa della camma con un cacciavite fino a quando non è ben serrata. Non utilizzare un cacciavite elettrico per assemblare l'unità.

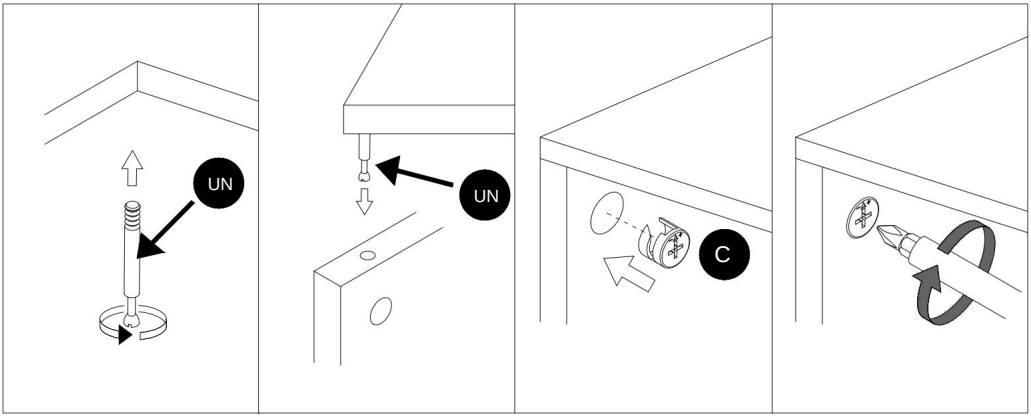

Leggere attentamente ogni passaggio prima di iniziare. È fondamentale che ogni passaggio delle istruzioni venga eseguito nell'ordine corretto. Se non si seguono questi passaggi in sequenza, si verificheranno difficoltà di montaggio.

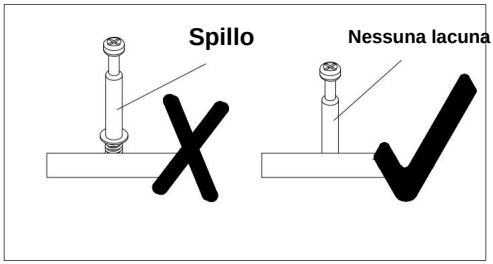

Machine Translated by Google

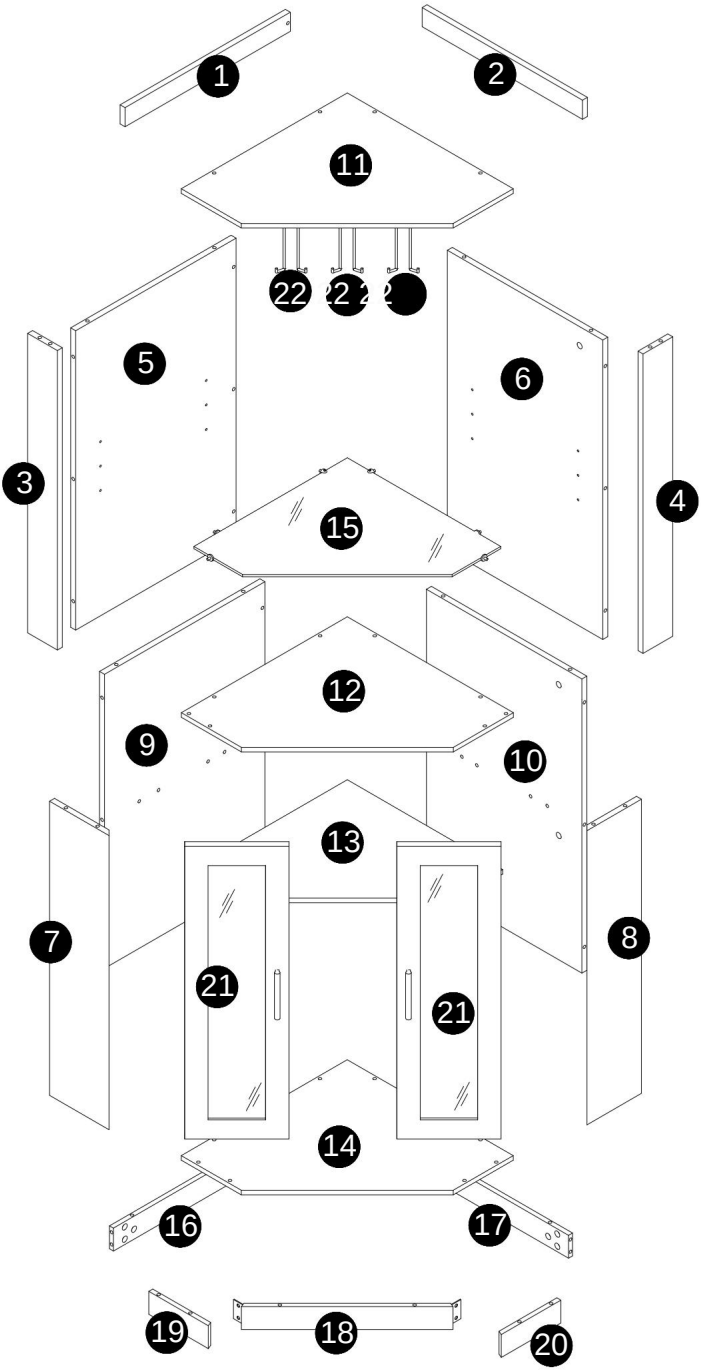

Machine Translated by Google

Elenco parti e hardware

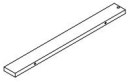 1 1 pz	 2 1 pz	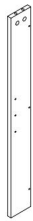 3 1 pz
 4 1 pz	 5 1 pz	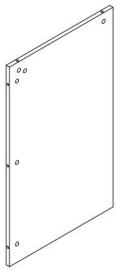 6 1 pz
 7 1 pz	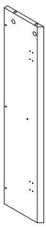 8 1 pz	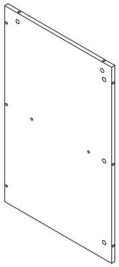 9 1 pz
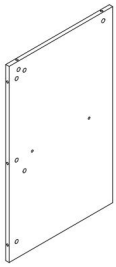 10 1 pz	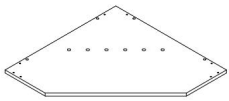 11 1 pz	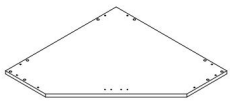 12 1 pz

Machine Translated by Google

Elenco parti e hardware

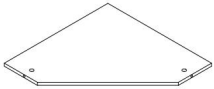 13 1 pz	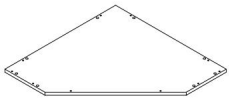 14 1 pz	 Vetro temperato 15 1 pz
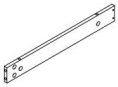 16 1 pz	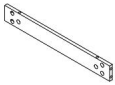 17 1 pz	 18 1 pz
 19 1 pz	 20 1 pz	 21 2 pezzi
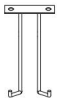 22 3 pezzi		

Elenco parti e hardware

 Un 46 pezzi	 M7X50MM B 27 pezzi	 C 46 pezzi	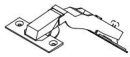 DW135° K 4 pezzi
 Ø6X30MM L 4 pezzi+1	 M 2 pezzi	 M6X10MM N 14 pezzi	 O 6 pezzi
 ST3.5X12MM P 28 pezzi	 Q 2 pezzi	 S 2 pezzi	 M4X22MM T 4 pezzi
 E 1 pz	 W 4 pezzi	 X 2 pezzi	 2 pezzi
 1 pz		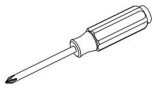	

Machine Translated by Google

1



x5

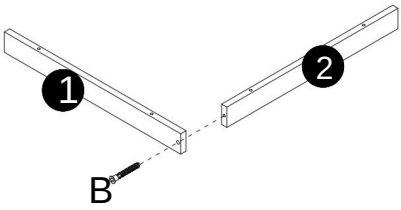

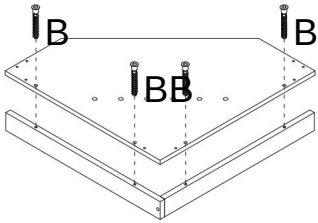

2



x6

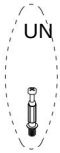

x8

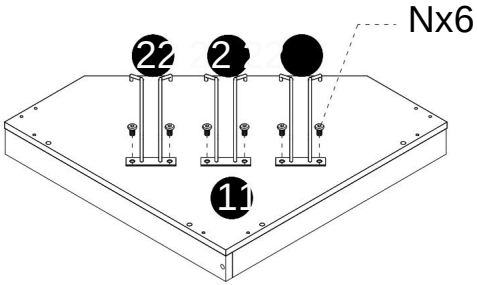

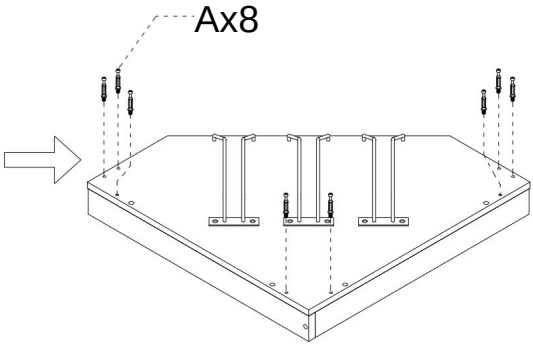

Machine Translated by Google

3



x3

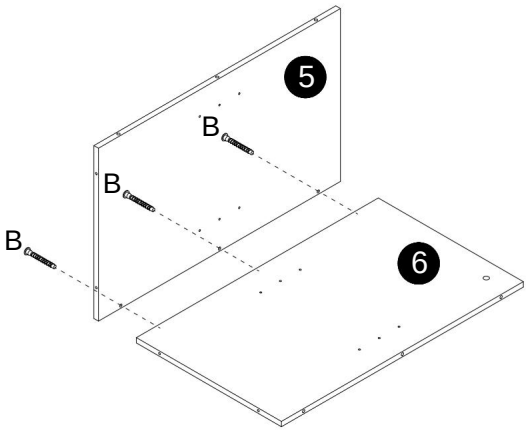

4



x6

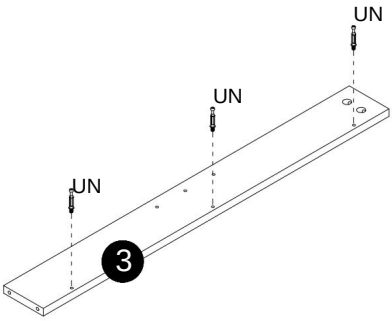

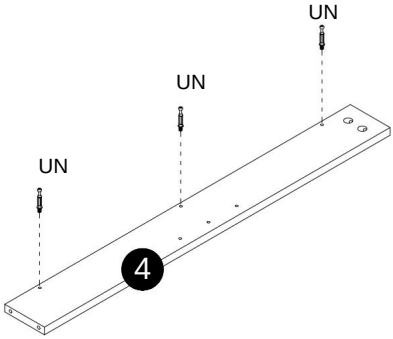

Machine Translated by Google

5

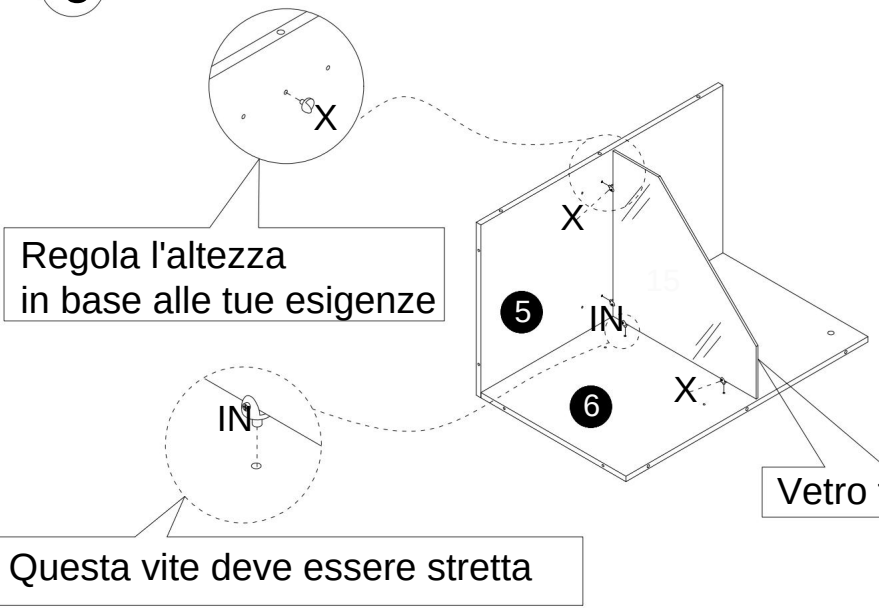

L
x4

6

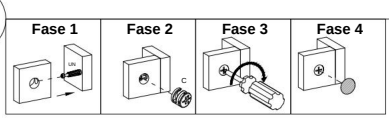

Upgrad

C
x6

X
x2

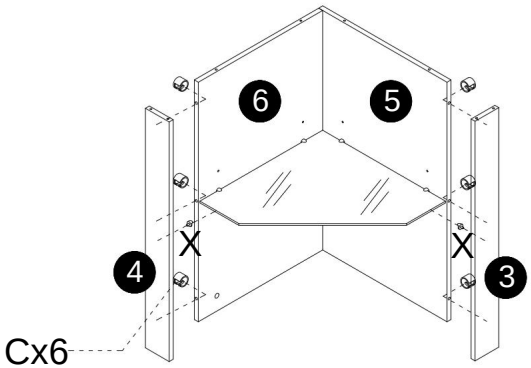

Machine Translated by Google

7

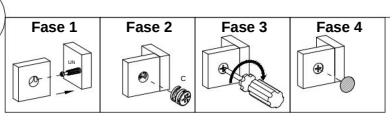



x8

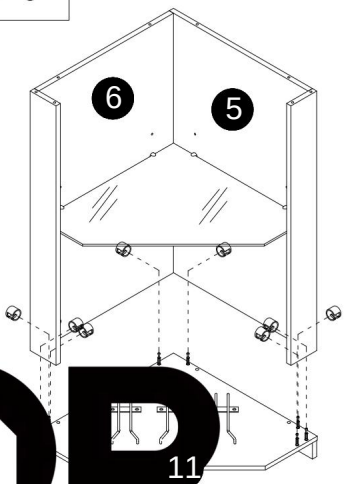

EVOR

·The Home Creator Way

8

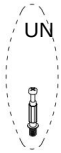

x8

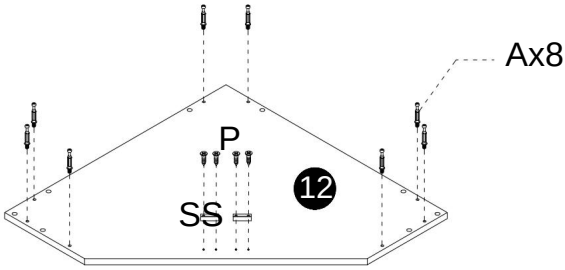





x2

Machine Translated by Google

9

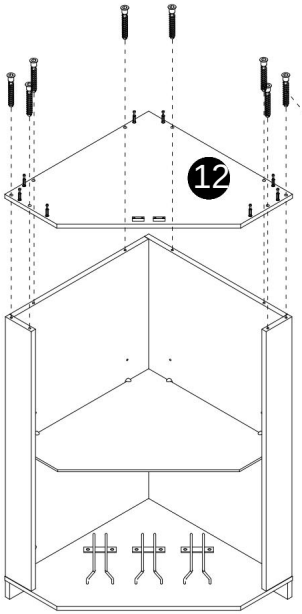



10

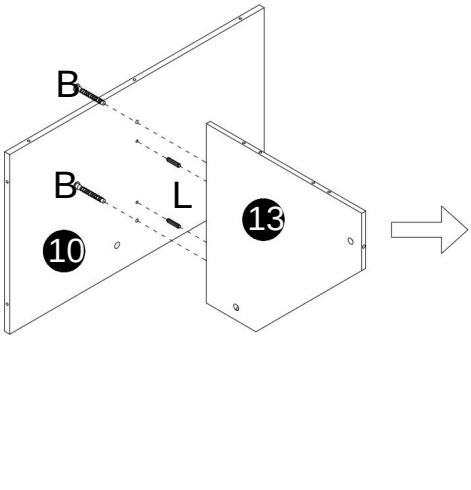





Machine Translated by Google

11

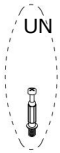

x8

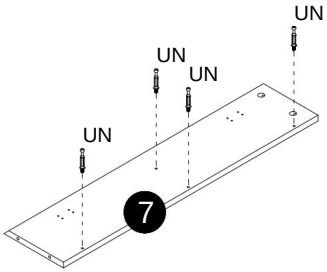

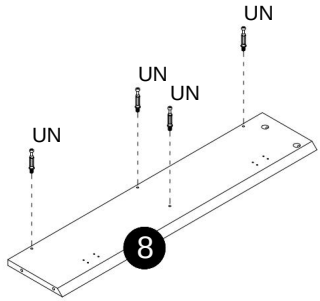

12

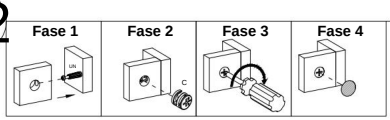



x8

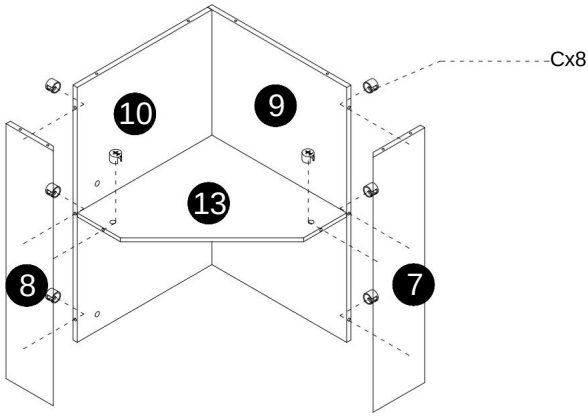

Machine Translated by Google

13

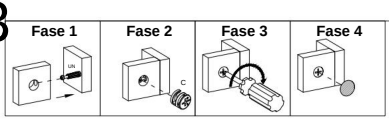



x8

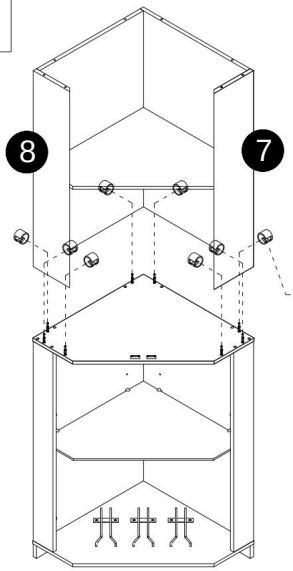

Cx8

14



x10

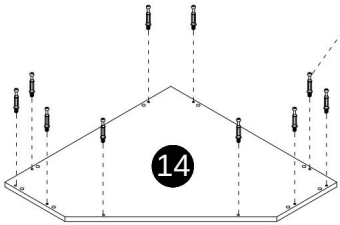

Ax10

Machine Translated by Google

15

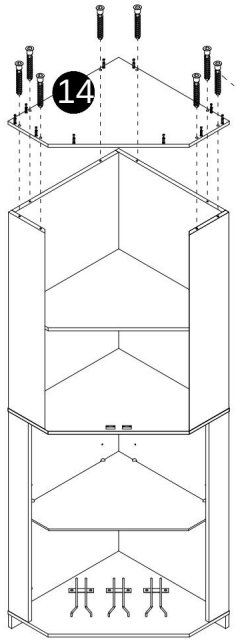



x8

16

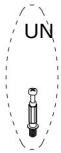

x6

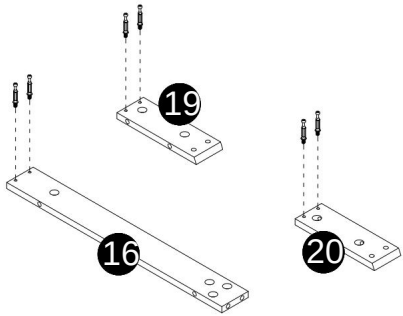

17

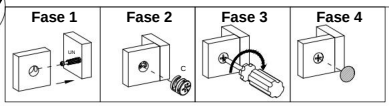



x6

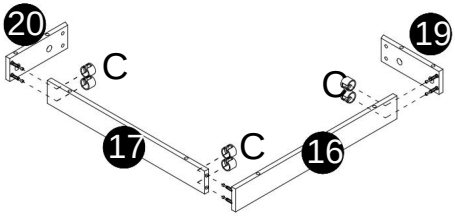

16



x2



x8

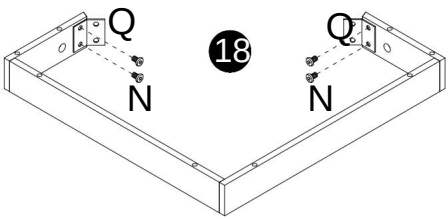

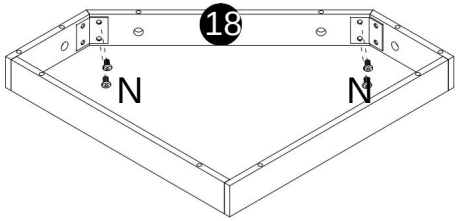

Machine Translated by Google

17

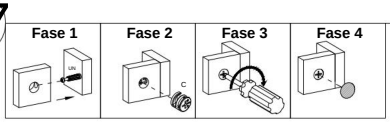

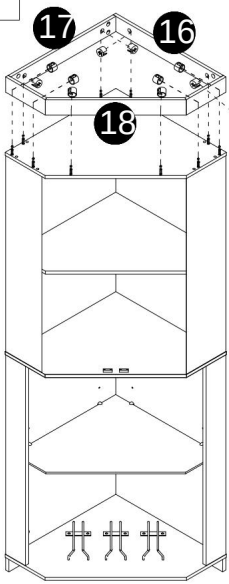

Cx10



x10

18

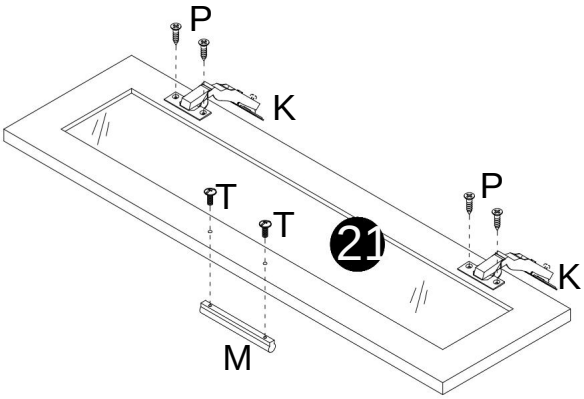

x2



x4



x8



x4



x2

Machine Translated by Google

19



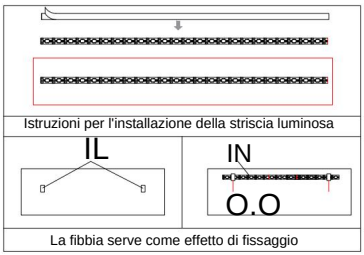

La striscia luminosa è installata sotto la tavola a strati

La striscia LED passa attraverso il foro del pannello posteriore

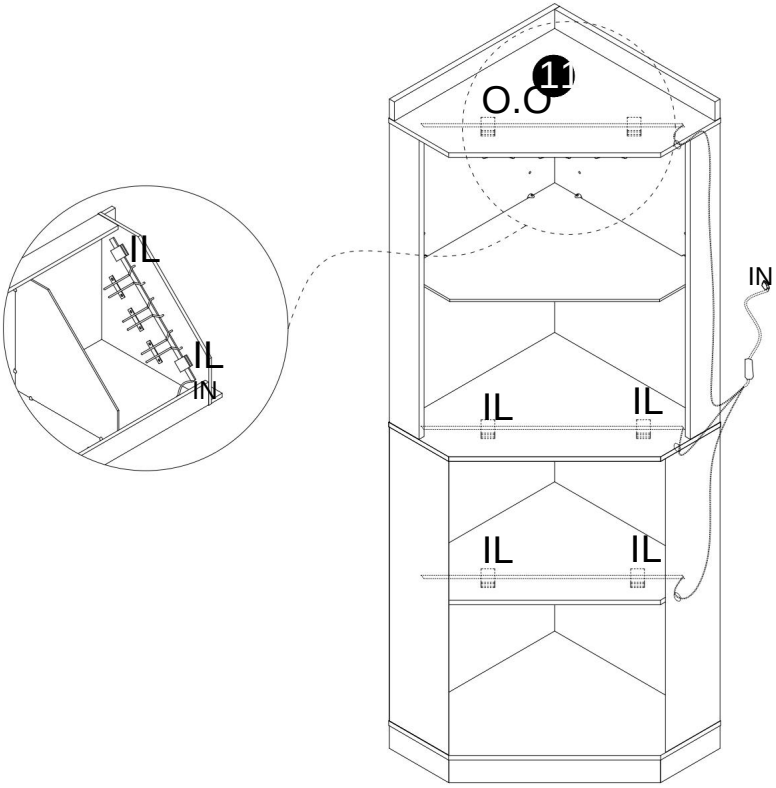

Machine Translated by Google

20

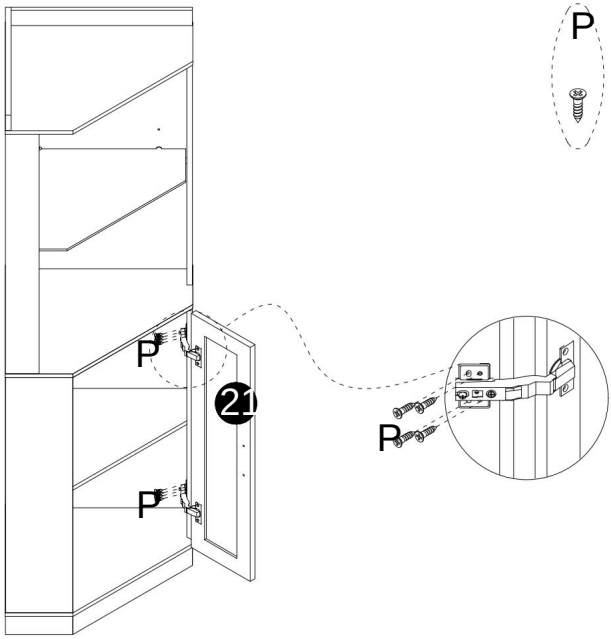

21

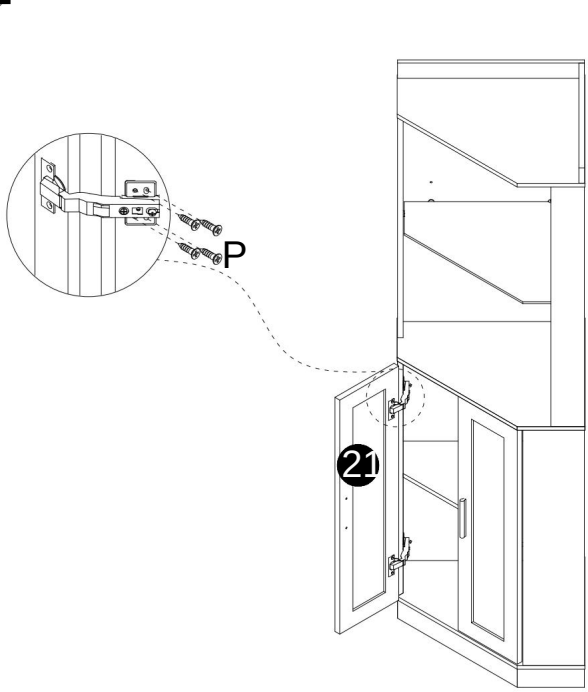

Machine Translated by Google

Metodo di regolazione della cerniera della porta

Metodo 1:

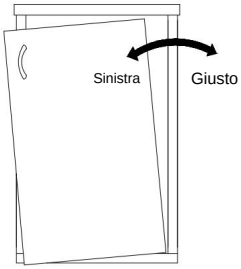

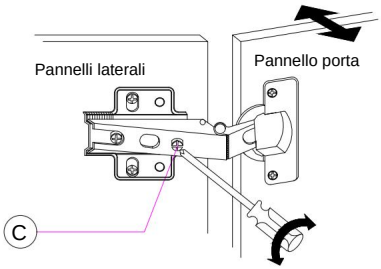

Spostare la porta a sinistra o a destra: 1. Ruotare la vite C con un cacciavite in senso orario per spostare il pannello della porta a sinistra 2. Ruotare la vite C

in senso antiorario con un cacciavite per regolare il pannello della porta in modo che si sposti verso destra

Metodo 2:

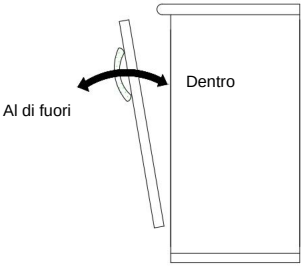

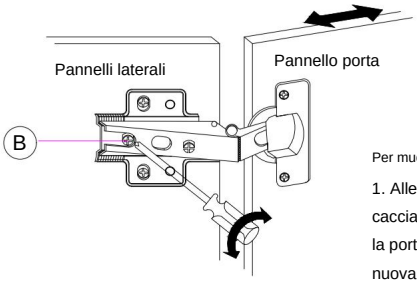

Per muovere la porta verso l'interno o verso l'esterno:

1. Allentare la vite B utilizzando un cacciavite, come mostrato nella Figura 2. Spostare la porta nella posizione corretta 3. Stringere nuovamente le viti

Metodo 3:

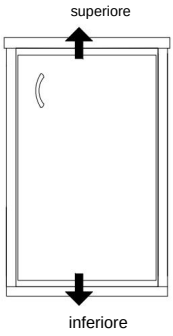

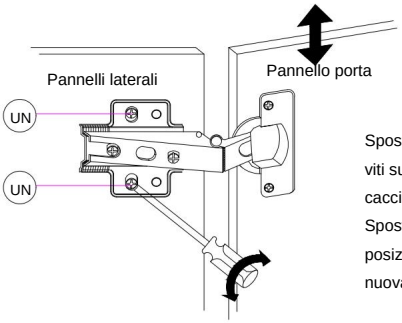

Spostare la porta su e giù: 1. Allentare le viti superiore e inferiore A utilizzando un cacciavite, come mostrato nella Figura 2. Spostare la porta nella posizione corretta e allinearla 3. Stringere nuovamente le viti

Machine Translated by Google

Installare l'hardware di sicurezza antiribaltamento

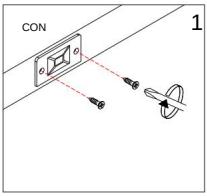

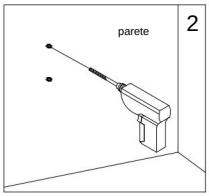

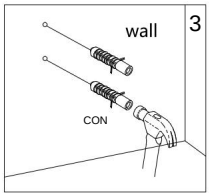

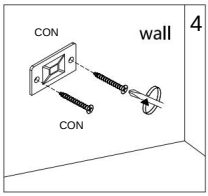





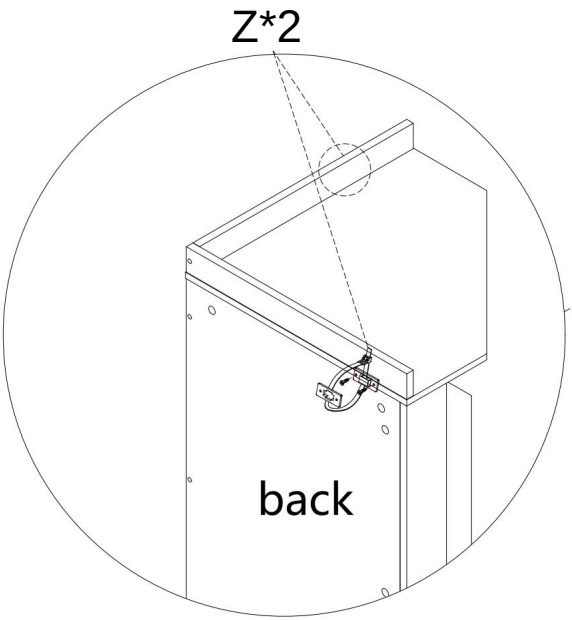

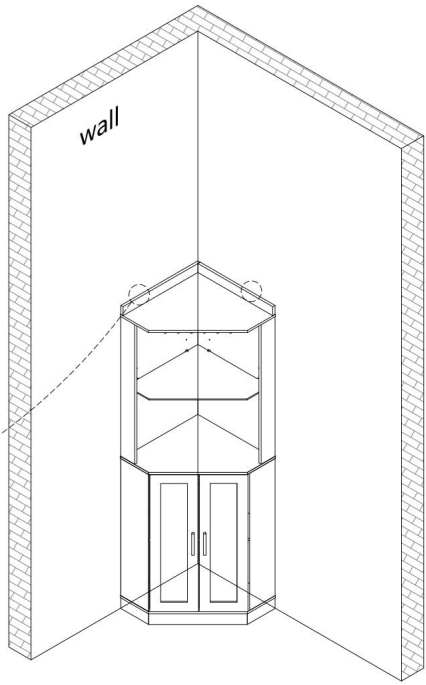

Machine Translated by Google

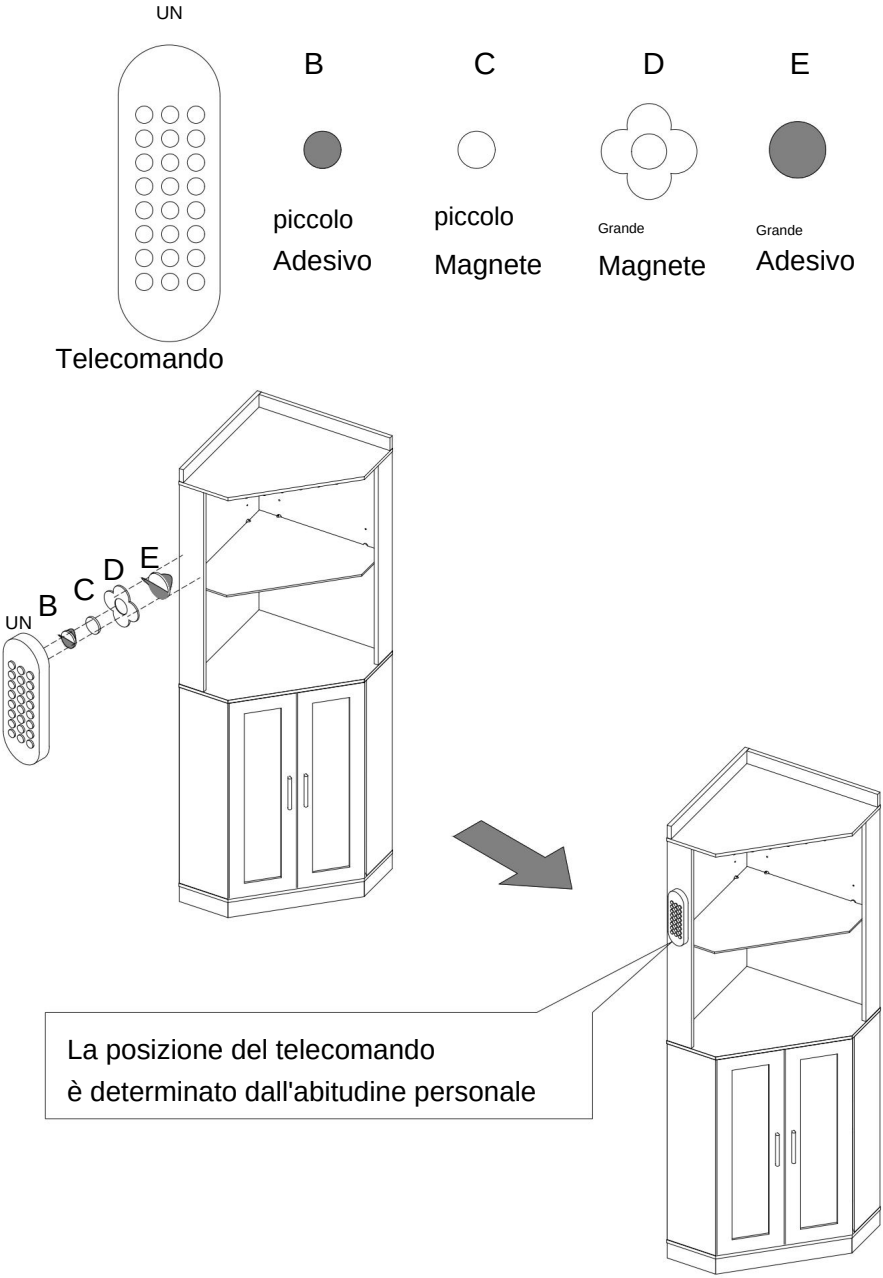

Machine Translated by Google



Machine Translated by Google

VEVOR

Upgrade · The Home Creator Way

Plate type wine cabinet

MODEL: DX0202-C250499S-01

Machine Translated by Google

VEVOR
Upgrade·The Home Creator Way

Plate type wine cabinet

MODEL: DX0202-C250499S-01

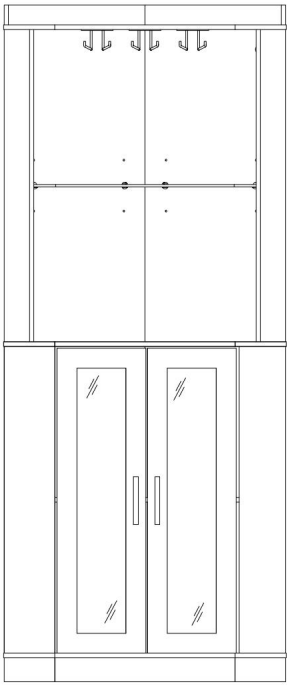

This is the original instruction, please read all manual instructions carefully before operating. VEVOR reserves a clear interpretation of our user manual. The appearance of the product shall be subject to the product you received. Please forgive us that we won't inform you again if there are any technology or software updates on our product.

Machine Translated by Google

SAFETY INSTRUCTIONS

INTRODUCTION

Thank you for purchasing our products. Committed to providing customers with the best quality products and service has always been our lifelong goal. Before using the product, please read this instruction manual carefully to ensure correct use. Keep the instruction manual in a place where the user can find it at any time.

ASSEMBLY PRECAUTIONS

There are many components and accessories in the package. Each component and accessory is labeled with a letter or a number, check carefully before using any of them. Keep them away from children to prevent accidents.

1. Assemble only according to these instructions. Improper assembly may create hazards.
2. Wear ANSI-approved safety goggles and heavy-duty work gloves during assembly.
3. Keep the assembly area clean and well-lit.
4. Keep bystanders out of the area during assembly.
5. Do not assemble if tired or when under the influence of alcohol, drugs or medication.
6. The product capabilities apply to properly and completely assembled products only.
7. If possible, you can use power tools to make assembly easier.
8. The main components of the product is relatively heavy. Please pay attention to safety during installation.
9. The product is not stable during installation, Please do not move it randomly before it is completely installed.
10. For additional information regarding the parts listed in the following.
11. pages, please refer to the Assembly Diagram of this manual. Unwrap and separate all parts in a clean work area.

Machine Translated by Google

***PLEASE BE SURE TO FOLLOW THE INSTALLATION STEPS IN THE MANUAL TO AVOID UNNECSSARY LOSSES CAUSED BY IMPROPER INSTALLATION.**

USE PRECAUTIONS

1) Do not exceed specified weight capacities.
2) Use only on a flat, level, hard, and smooth surface
3) Use as intended only.
4) Inspect before every use; do not use if parts are loose or damaged.

WARNING

Children have died from furniture tipover. To reduce the risk of furniture tipover:

- **NEVER put a TV on this product.**
- **NEVER allow children to stand, climb or hang on drawers,doors,or shelves.**
- **Place heaviest items in the lowest drawers.**

SAVE THIS MANUAL

FCC Information for USB light strings:

CAUTION: Changes or modifications not expressly approved by the party responsible for compliance could void the user's authority to operate the equipment!

This device complies with Part 15 of the FCC Rules. Operation is subject to the following two conditions:

1) This product may cause harmful interference.

2)This product must accept any interference received, including interference that may cause undesired operation.

Machine Translated by Google

WARNING: Changes or modifications to this product not expressly approved by the party.responsible for compliance could void the user's authority to operate the product.

Note: This product has been tested and found to comply with the limits for a Class B digital device pursuant to Part 15 of the FCC Rules, These limits are designed to provide reasonable protection against harmful interference in a residential installation.

This product generates, uses and can radiate radio frequency energy, and if not installed and used in accordance with the instructions, may cause harmful interference to radio communications. However, there is no guarantee that interference will not occur in a particular installation. If this product does cause harmful interference to radio or television reception,which can be determined by turning the product off and on, the user is encouraged to try to correct the interference by one or more of the following measures.

· Reorient or relocate the receiving antenna.

· Increase the distance between the product and receiver.

· Connect the product to an outlet on a circuit different from that to which the receiver is connected.

· Consult the dealer or an experienced radio/TV technician for assistance.

CORRECT DISPOSAL FOR USB LIGHT STRINGS



This product is subject to the provision of european Directive 2012/19/EU. The symbol showing a wheelie bin crossed through indicates that the product requires separate refuse collection in the European Union. This applies to the product and all accessories marked with this symbol. Products marked as such may not be discarded with normal domestic waste, but must be taken to acollection point for recycling electrical and electronic devices.

Machine Translated by Google

Instalación de levas y pasadores

Enrosque el pasador en el orificio. Para ajustar las levas correctamente, asegúrese de que la flecha de la leva esté orientada hacia el orificio del pasador que bloquea. Bloquee la leva girando la cabeza de la leva con un destornillador hasta que esté apretada. No utilice un destornillador eléctrico para ensamblar la unidad.

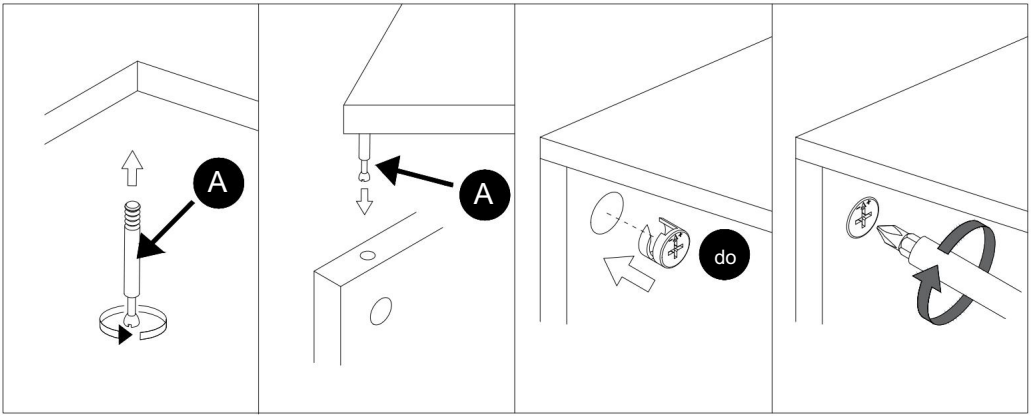

Lea cada paso detenidamente antes de comenzar. Es fundamental realizar cada paso de las instrucciones en el orden correcto. Si no se siguen en secuencia, podrían surgir dificultades de montaje.

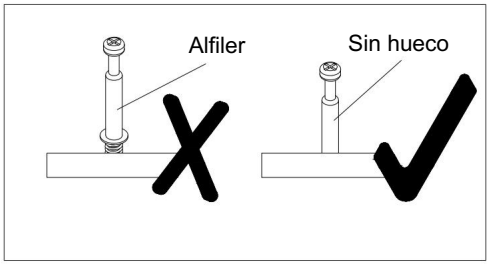

Machine Translated by Google

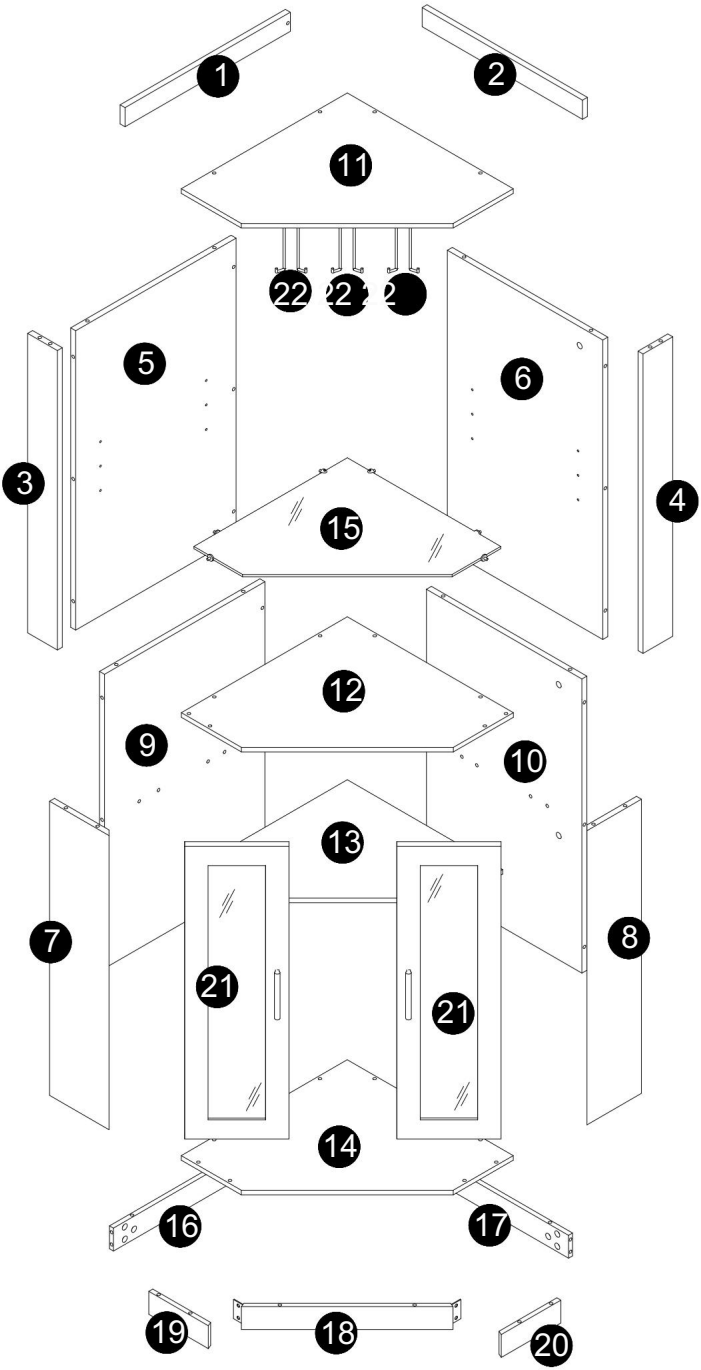

Machine Translated by Google

Lista de piezas y hardware

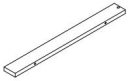 1 pieza	 2 pieza	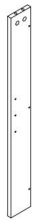 3 pieza
 4 pieza	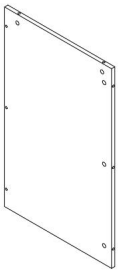 5 pieza	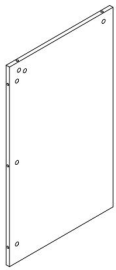 6 1 pieza
 7 pieza	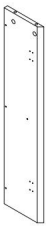 8 1 pieza	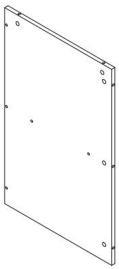 9 pieza
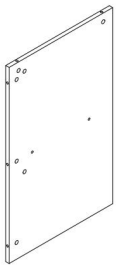 10 1 pieza	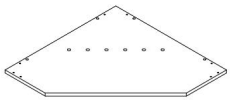 11 1 pieza	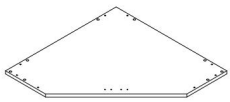 12 1 pieza

Machine Translated by Google

Lista de piezas y hardware

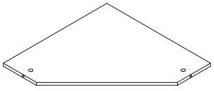 13 1 pieza	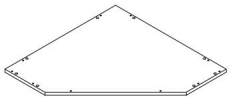 14 1 pieza	 Vidrio templado 15 1 pieza
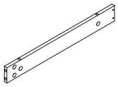 16 1 pieza	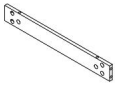 17 1 pieza	 18 1 pieza
 19 1 pieza	 20 1 pieza	 21 2 piezas
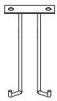 22 3 piezas		

Lista de piezas y hardware

 46 piezas	 M7X50MM B 27 piezas	 C 46 piezas	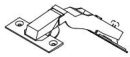 DW135° K 4 piezas
 Ø6X30MM L 4pcs+1	 M 2 piezas	 M6X10MM N 14 piezas	 O 6 piezas
 ST3.5X12MM P 28 piezas	 Q 2 piezas	 S 2 piezas	 M4X22MM T 4 piezas
 Y 1pc	 W piezas	 X 2 piezas	 2 piezas
 1 pieza		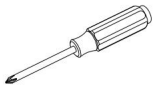	

Machine Translated by Google

1



x5

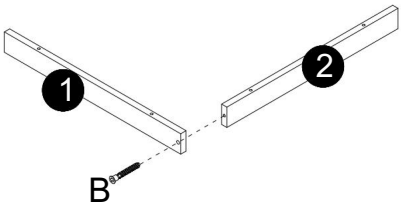

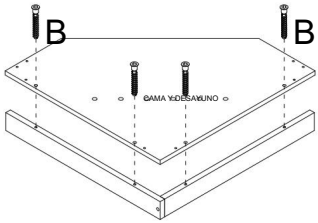

2



x6

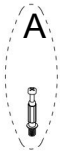

x8

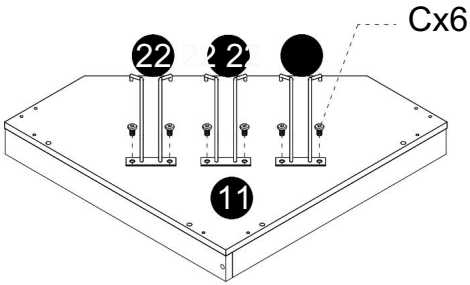

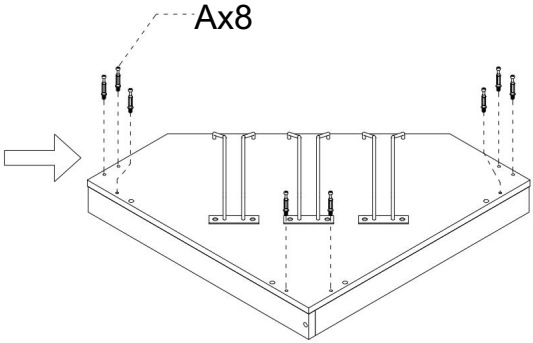

Machine Translated by Google

3



x3

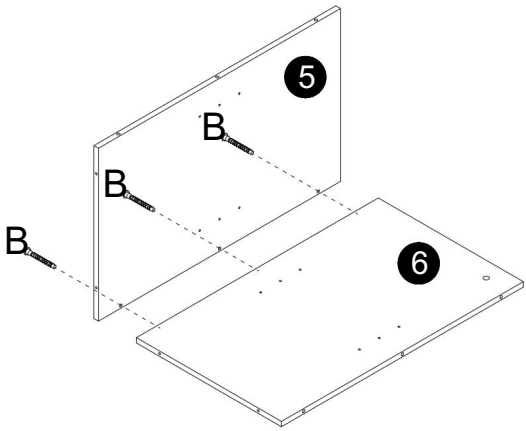

4

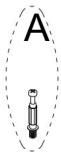

x6

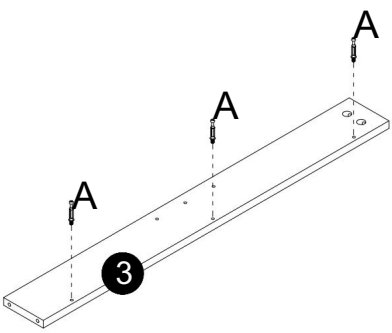

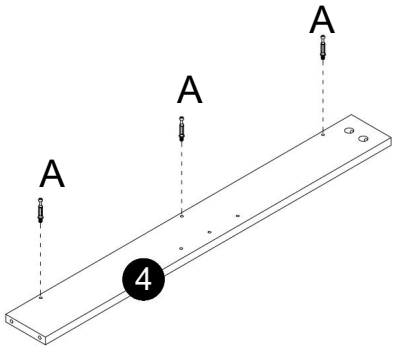

5

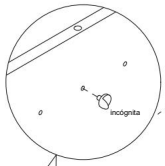

Ajuste la altura
según sus necesidades.

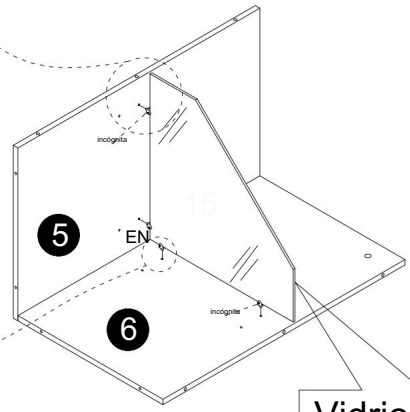

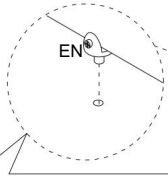

Este tornillo necesita ser apretado

Ancho x4



Vidrio templado

V

6

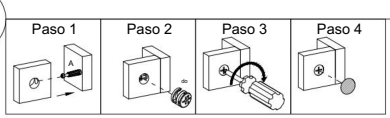

Upgrado



x6



x2

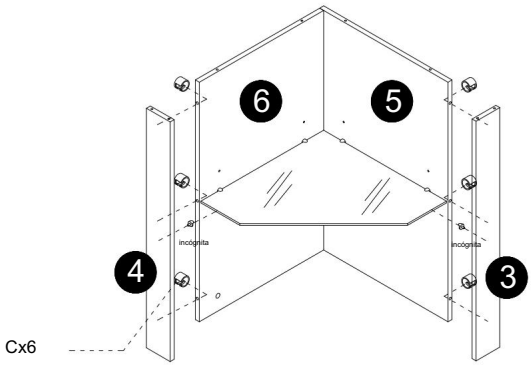

Machine Translated by Google

7

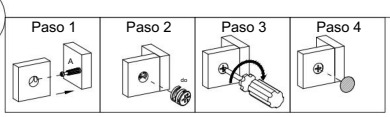



x8

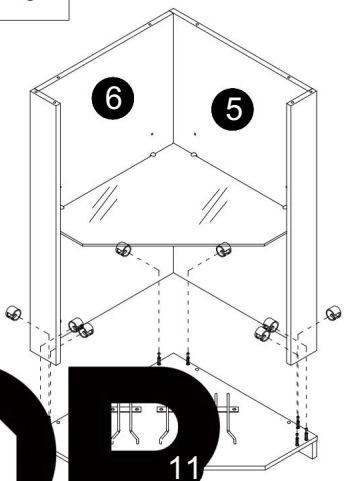

EVOR

·The Home Creator Way

8

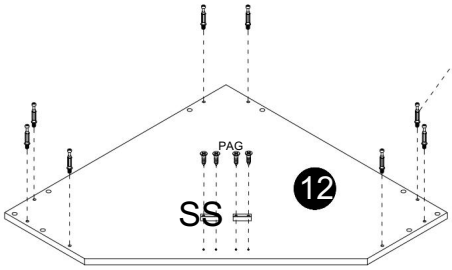

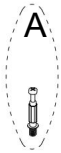

x8





x2

Machine Translated by Google

9

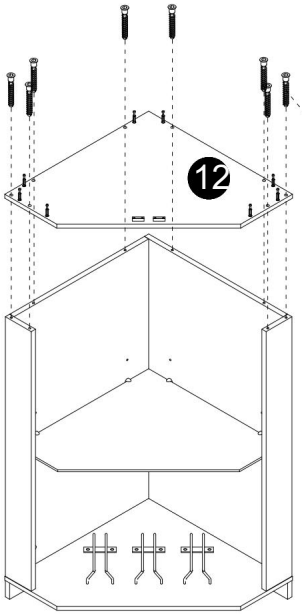

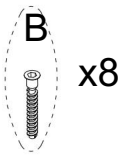

10

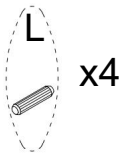

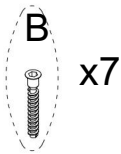

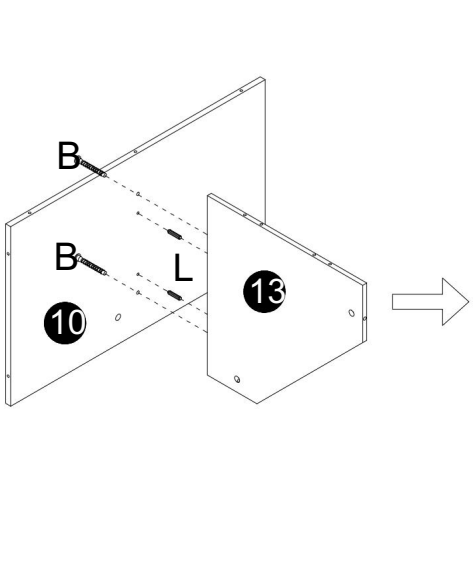

Machine Translated by Google

11

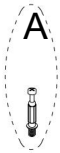

x8

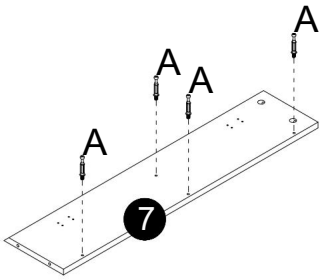

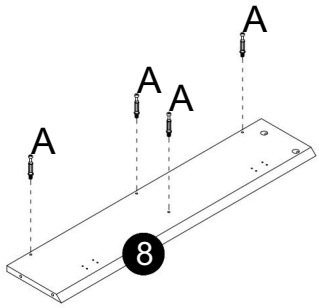

12

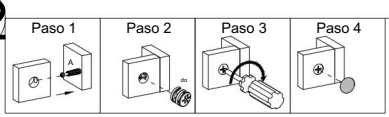



x8

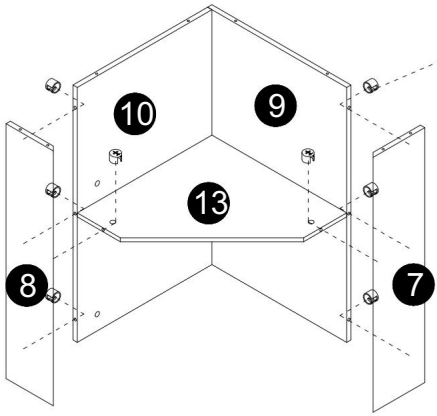

Cx8

Machine Translated by Google

13

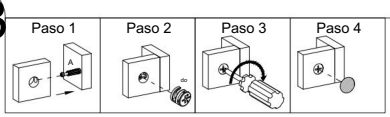



x8

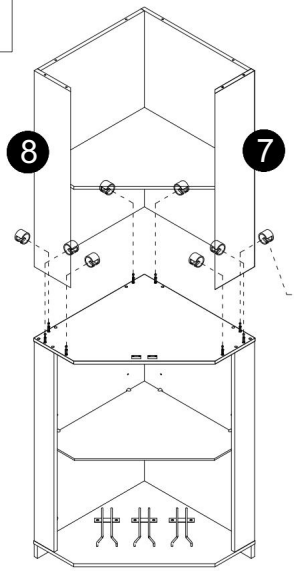

Cx8

14



x10

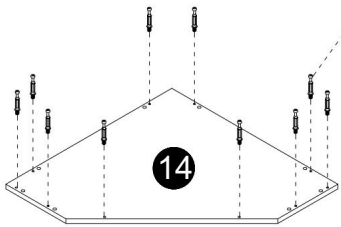

Ax10

Machine Translated by Google

15

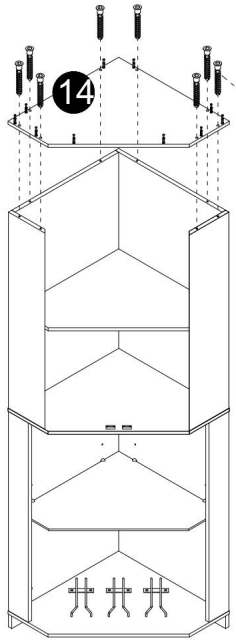



16

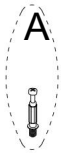

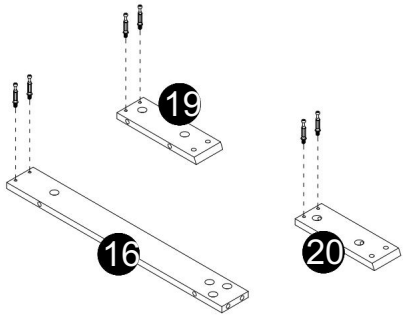

17

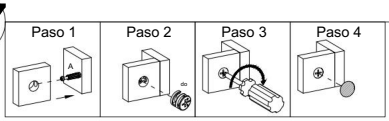
Paso 1
Paso 2
Paso 3
Paso 4


do

x6

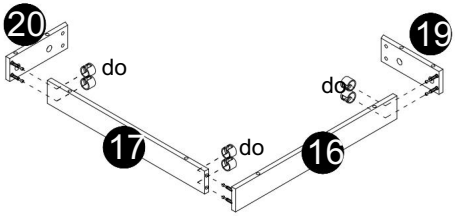
20
19
do
do
17
do
16

16


Q

x2


norte

x8

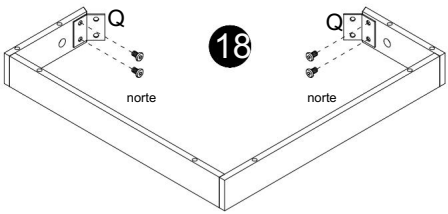
Q
18
Q
norte
norte

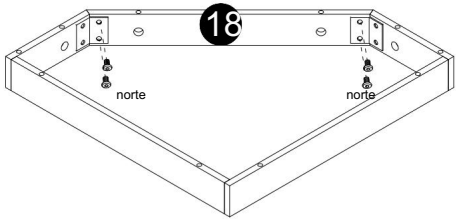
18
norte
norte

Machine Translated by Google

17

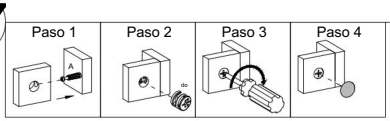



x10

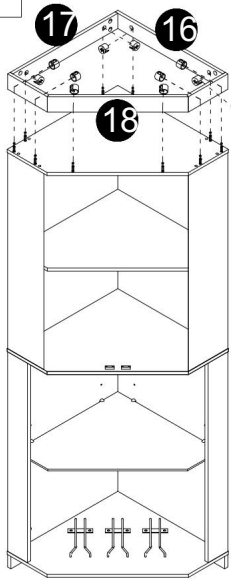

Cx10

18



x4



x8



x4

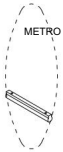

x2

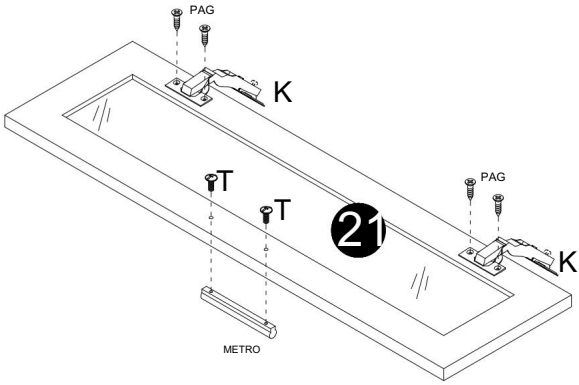

x2

Machine Translated by Google

19



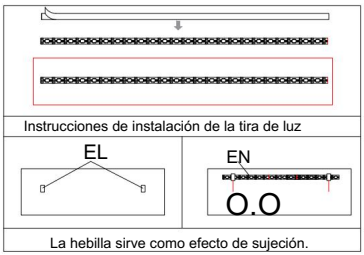

La tira de luz se instala debajo del tablero de capas.

La tira de LED pasa a través del orificio de la placa posterior

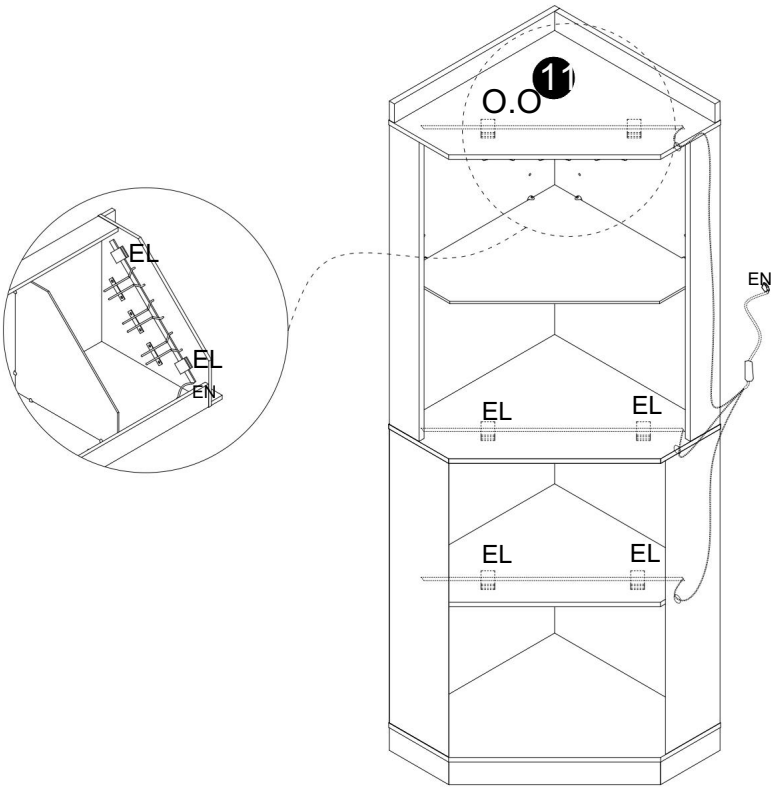

La tira de luz pasa desde la derecha.

Machine Translated by Google

20

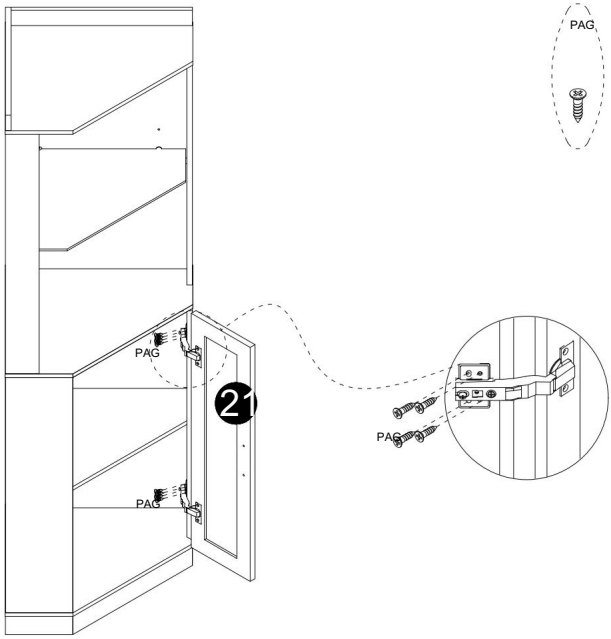

21

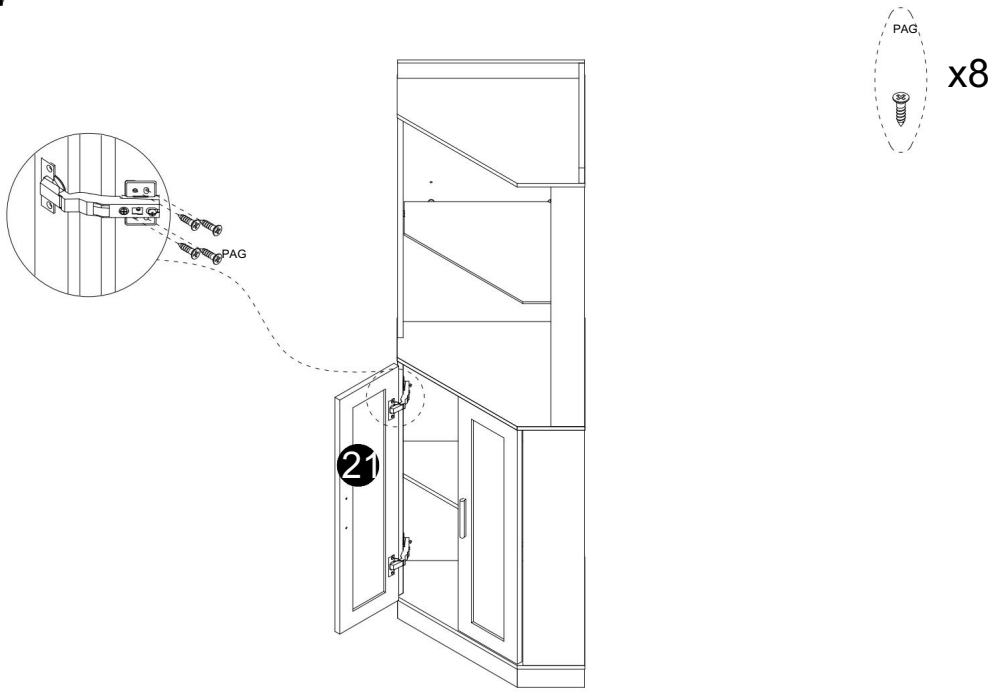

Machine Translated by Google

Método de ajuste de las bisagras de la puerta

Método 1:

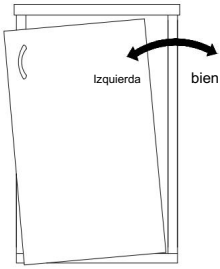

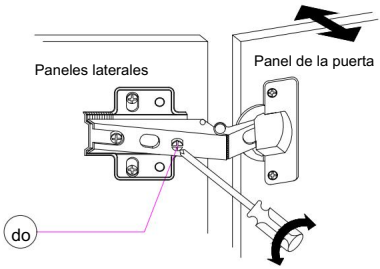

Mueva la puerta hacia la izquierda o la derecha: 1. Gire el tornillo C con un destornillador en el sentido de las agujas del reloj para mover el panel de la puerta hacia la izquierda. 2. Gire el tornillo C En sentido contrario a las agujas del reloj con un destornillador para ajustar el panel de la puerta para moverlo hacia la derecha

Método 2:

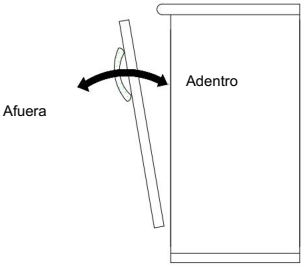

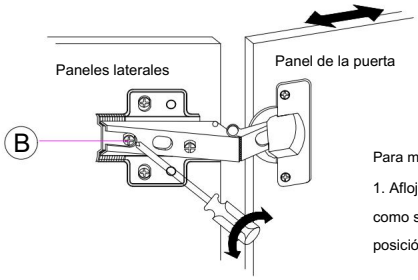

Para mover la puerta hacia adentro o hacia afuera: 1. Afloje el tornillo B con un destornillador, como se muestra en la Figura 2. Mueva la puerta a la posición adecuada. 3. Apriete los tornillos nuevamente.

Método 3:

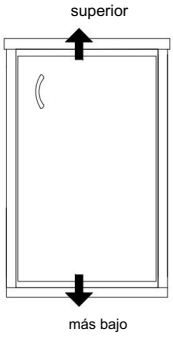

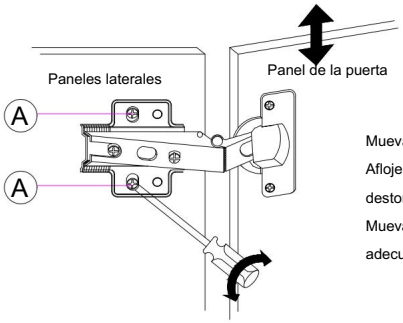

Mueva la puerta hacia arriba y hacia abajo: 1. Afloje los tornillos superior e inferior A con un destornillador, como se muestra en la Figura 2. Mueva la puerta a la posición adecuada y alinéela 3. Apriete los tornillos nuevamente

Machine Translated by Google

Instalar el hardware de retención antivuelco

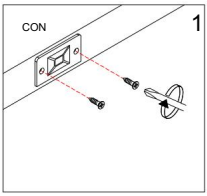

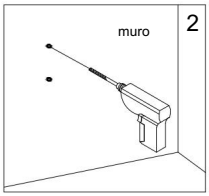

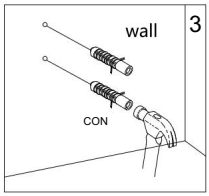

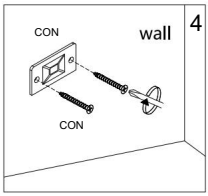





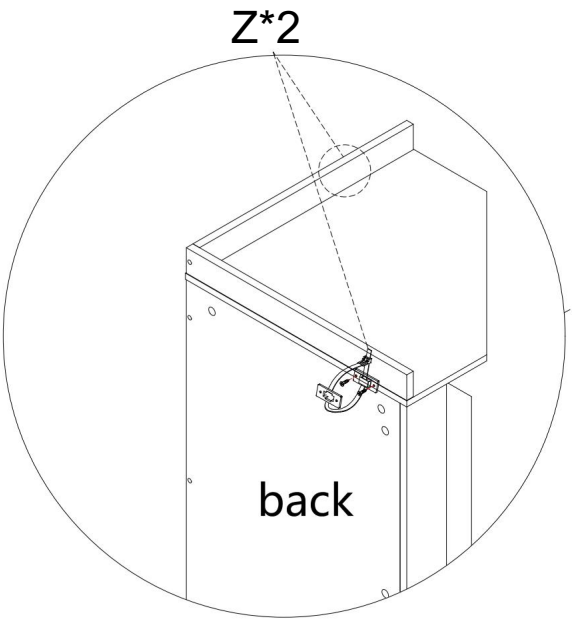

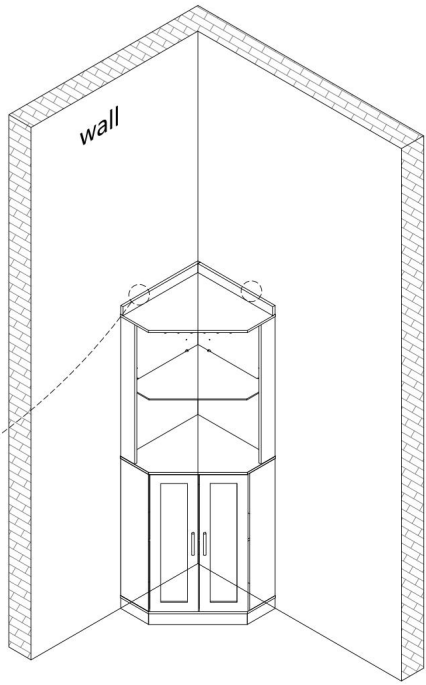

Machine Translated by Google

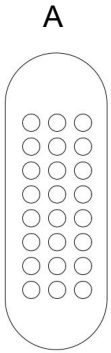

Mando a distancia

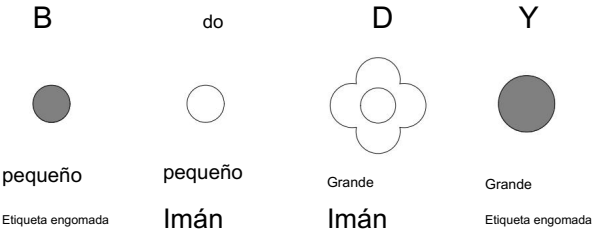

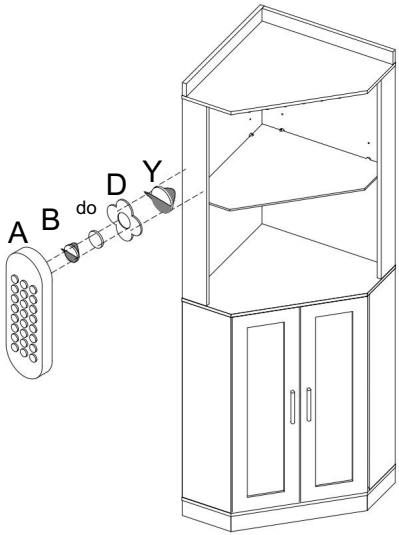

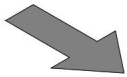

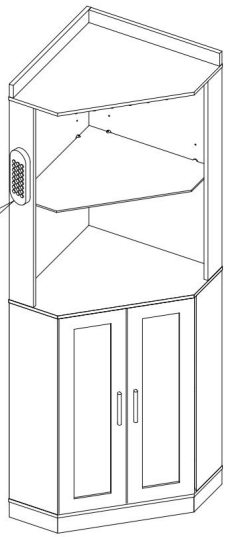

La posición del control remoto
está determinado por el hábito personal

Machine Translated by Google



Machine Translated by Google

VEVOR

Upgrade · The Home Creator Way

Plate type wine cabinet

MODEL: DX0202-C250499S-01

Machine Translated by Google

VEVOR
Upgrade·The Home Creator Way

Plate type wine cabinet

MODEL: DX0202-C250499S-01

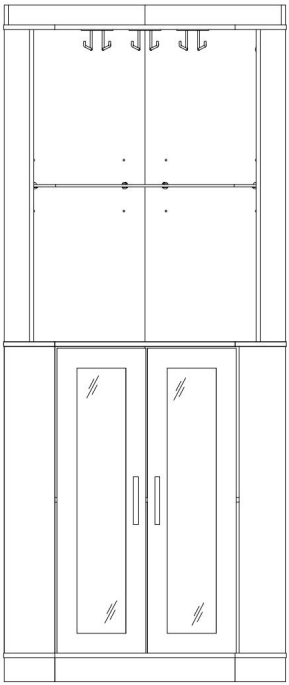

This is the original instruction, please read all manual instructions carefully before operating. VEVOR reserves a clear interpretation of our user manual. The appearance of the product shall be subject to the product you received. Please forgive us that we won't inform you again if there are any technology or software updates on our product.

Machine Translated by Google

SAFETY INSTRUCTIONS

INTRODUCTION

Thank you for purchasing our products. Committed to providing customers with the best quality products and service has always been our lifelong goal. Before using the product, please read this instruction manual carefully to ensure correct use. Keep the instruction manual in a place where the user can find it at any time.

ASSEMBLY PRECAUTIONS

There are many components and accessories in the package. Each component and accessory is labeled with a letter or a number, check carefully before using any of them. Keep them away from children to prevent accidents.

1. Assemble only according to these instructions. Improper assembly may create hazards.
2. Wear ANSI-approved safety goggles and heavy-duty work gloves during assembly.
3. Keep the assembly area clean and well-lit.
4. Keep bystanders out of the area during assembly.
5. Do not assemble if tired or when under the influence of alcohol, drugs or medication.
6. The product capabilities apply to properly and completely assembled products only.
7. If possible, you can use power tools to make assembly easier.
8. The main components of the product is relatively heavy. Please pay attention to safety during installation.
9. The product is not stable during installation, Please do not move it randomly before it is completely installed.
10. For additional information regarding the parts listed in the following.
11. pages, please refer to the Assembly Diagram of this manual. Unwrap and separate all parts in a clean work area.

Machine Translated by Google

***PLEASE BE SURE TO FOLLOW THE INSTALLATION STEPS IN THE MANUAL TO AVOID UNNECSSARY LOSSES CAUSED BY IMPROPER INSTALLATION.**

USE PRECAUTIONS

1) Do not exceed specified weight capacities.
2) Use only on a flat, level, hard, and smooth surface
3) Use as intended only.
4) Inspect before every use; do not use if parts are loose or damaged.

WARNING

Children have died from furniture tipover. To reduce the risk of furniture tipover:

- **NEVER put a TV on this product.**
- **NEVER allow children to stand, climb or hang on drawers,doors,or shelves.**
- **Place heaviest items in the lowest drawers.**

SAVE THIS MANUAL

FCC Information for USB light strings:

CAUTION: Changes or modifications not expressly approved by the party responsible for compliance could void the user's authority to operate the equipment!

This device complies with Part 15 of the FCC Rules. Operation is subject to the following two conditions:

1) This product may cause harmful interference.

2)This product must accept any interference received, including interference that may cause undesired operation.

Machine Translated by Google

WARNING: Changes or modifications to this product not expressly approved by the party.responsible for compliance could void the user's authority to operate the product.

Note: This product has been tested and found to comply with the limits for a Class B digital device pursuant to Part 15 of the FCC Rules, These limits are designed to provide reasonable protection against harmful interference in a residential installation.

This product generates, uses and can radiate radio frequency energy, and if not installed and used in accordance with the instructions, may cause harmful interference to radio communications. However, there is no guarantee that interference will not occur in a particular installation. If this product does cause harmful interference to radio or television reception,which can be determined by turning the product off and on, the user is encouraged to try to correct the interference by one or more of the following measures.

· Reorient or relocate the receiving antenna.

· Increase the distance between the product and receiver.

· Connect the product to an outlet on a circuit different from that to which the receiver is connected.

· Consult the dealer or an experienced radio/TV technician for assistance.

CORRECT DISPOSAL FOR USB LIGHT STRINGS



This product is subject to the provision of european Directive 2012/19/EU. The symbol showing a wheelie bin crossed through indicates that the product requires separate refuse collection in the European Union. This applies to the product and all accessories marked with this symbol. Products marked as such may not be discarded with normal domestic waste, but must be taken to acollection point for recycling electrical and electronic devices.

Machine Translated by Google

Montaż krzywek i sworzni

Wkręć sworzeń w otwór. Aby prawidłowo ustawić krzywki, upewnij się, że strzałka na krzywce jest skierowana w stronę otworu blokującego sworznia. Zablokuj krzywkę, obracając głowicę krzywki śrubokrętem, aż będzie dokręcona. Nie używaj wkrętarki elektrycznej do montażu urządzenia.

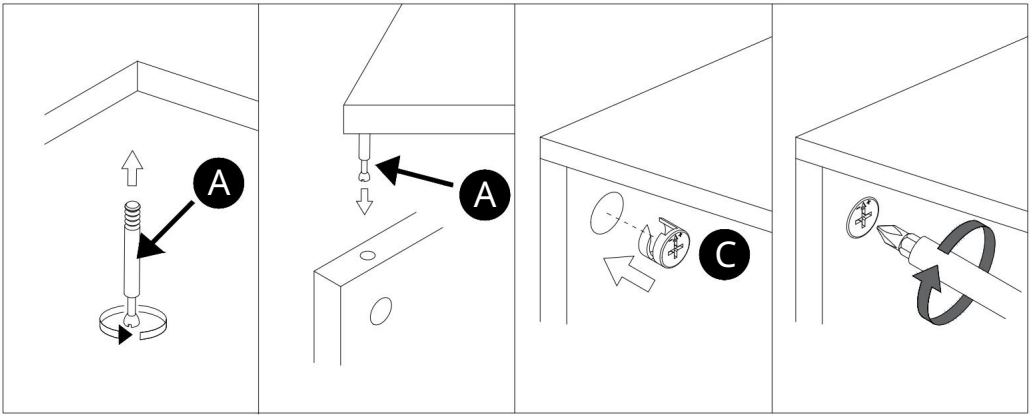

Przed rozpoczęciem pracy należy uważnie przeczytać każdy krok. Bardzo ważne jest, aby każdy krok instrukcji został wykonany we właściwej kolejności. Niewykonanie tych kroków w odpowiedniej kolejności może spowodować trudności w montażu.

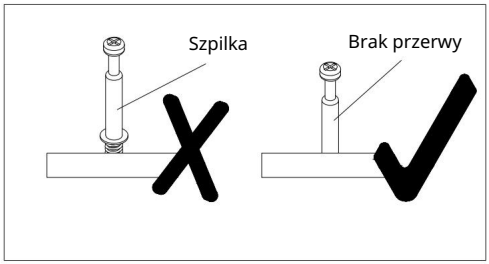

Machine Translated by Google

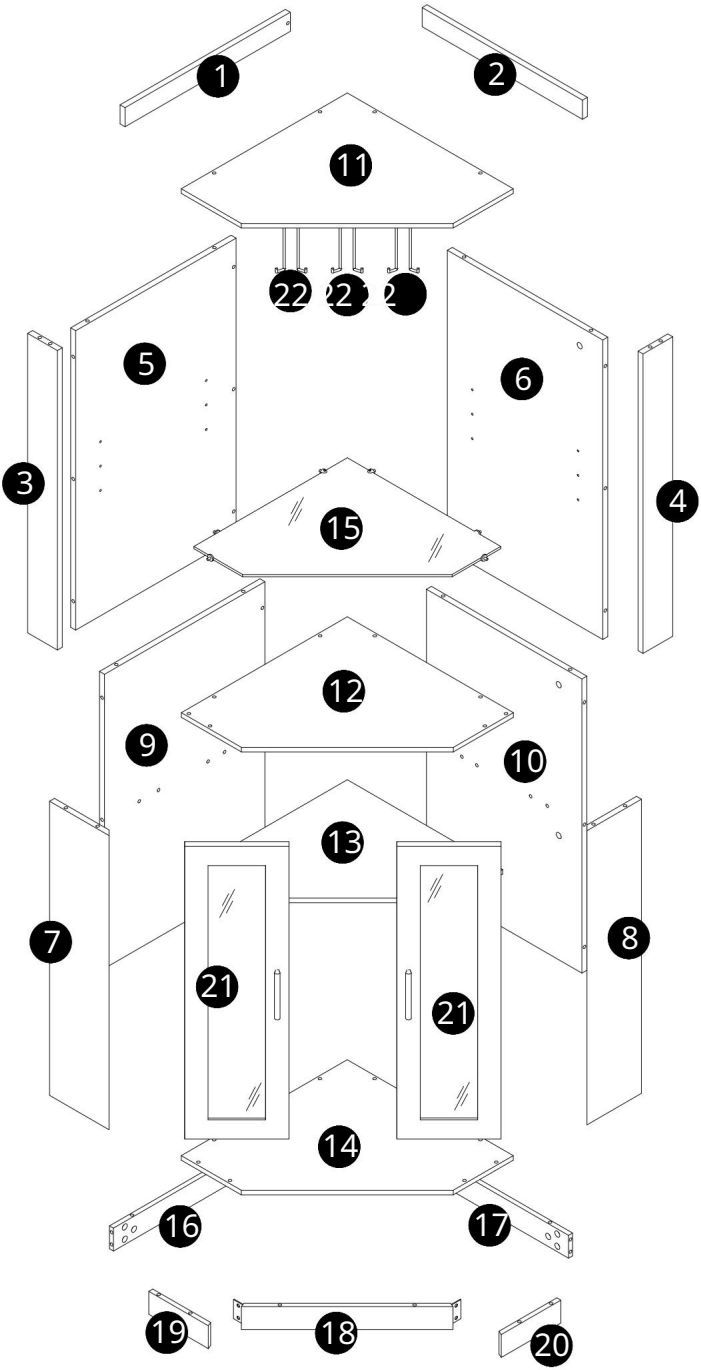

Machine Translated by Google

Lista części i sprzętu

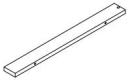 1 1 szt.	 2 1 szt.	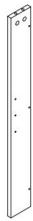 3 1 szt.
 4 1 szt.	 5 1 szt.	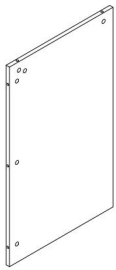 6 1 szt.
 7 1 szt.	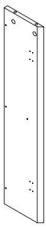 8 1 szt.	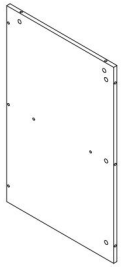 9 1 szt.
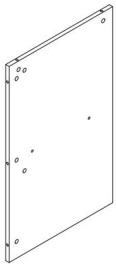 10 1 szt.	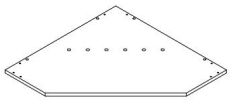 11 1 szt.	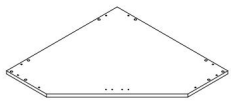 12 1 szt.

Machine Translated by Google

Lista części i sprzętu

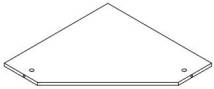 13 1 szt.	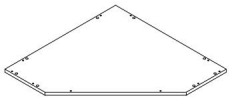 14 1 szt.	 Szkło hartowane 15 1 szt.
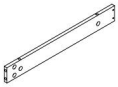 16 1 szt.	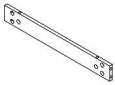 17 1 szt.	 18 1 szt.
 19 1 szt.	 20 1 szt.	 21 2 szt.
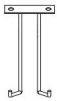 22 3 szt.		

Machine Translated by Google

Lista części i sprzętu

 46 sztuk	 M7X50MM B 27 szt.	 C 46 szt.	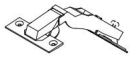 DW135° K 4 szt.
 Ø6X30MM L 4 szt.+1	 M 2 szt.	 M6X10MM N 14 szt.	 O 6 szt.
 ST3.5X12MM P 28 szt.	 Q 2 szt.	 S 2 szt.	 M4X22MM T 4 szt.
 I 1 szt.	 W 4 szt.	 2 szt.	 Z 2pcs
 1 szt.		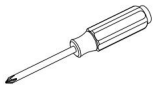	

Machine Translated by Google

1



x5

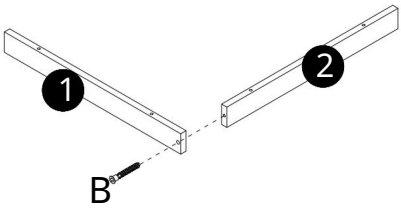

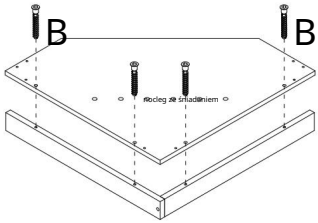

2



x6

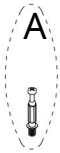

x8

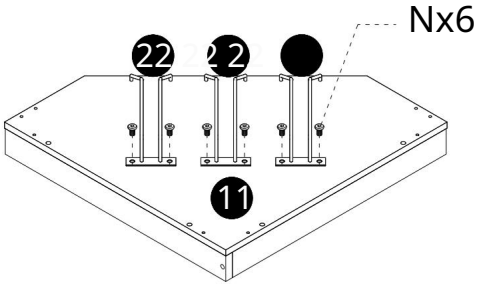

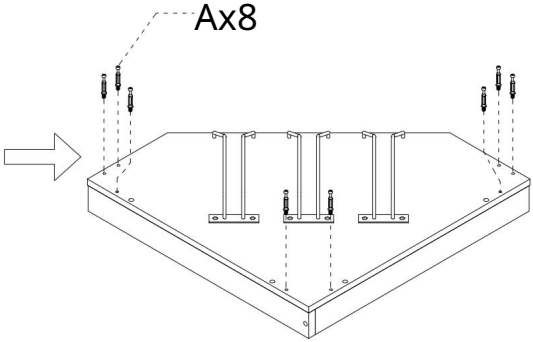

Machine Translated by Google

3



x3

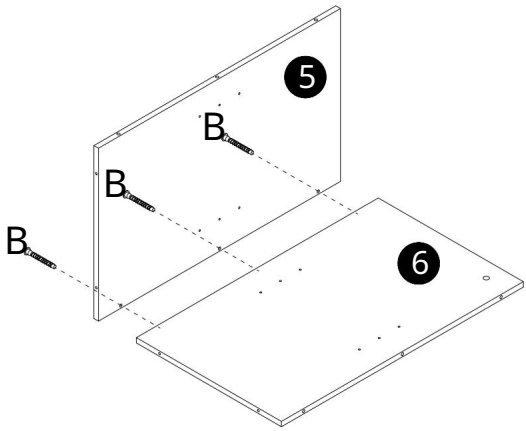

4

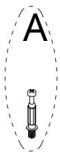

x6

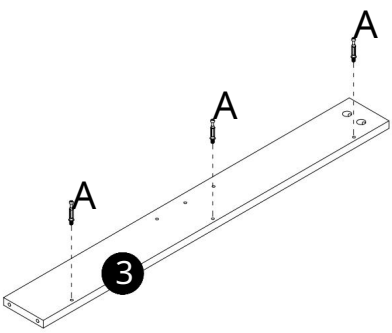

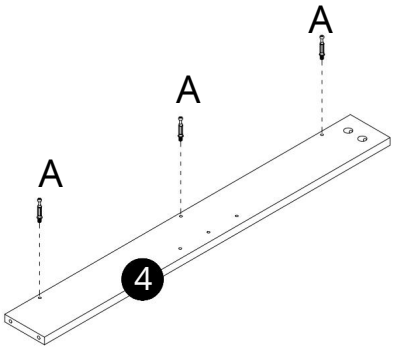

Machine Translated by Google

5

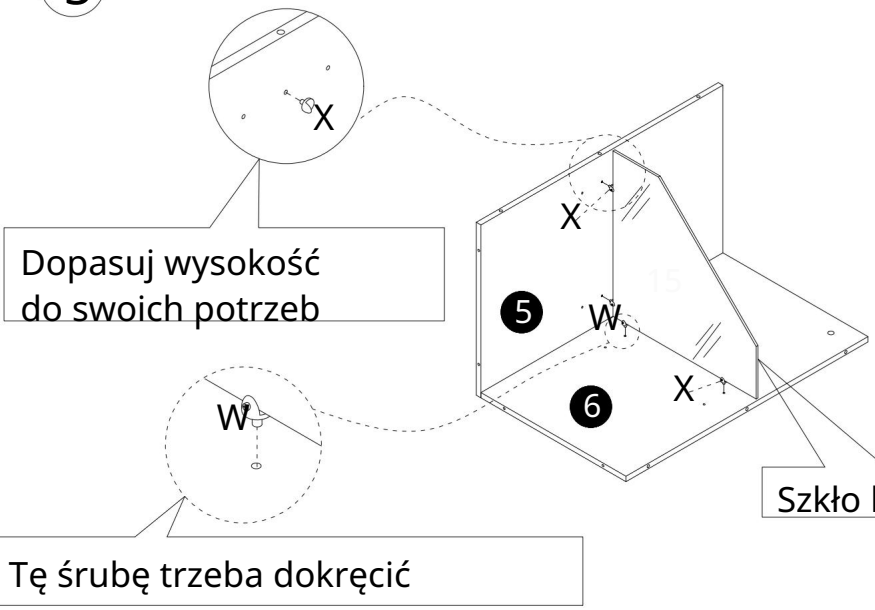

Szerokość x4

Szkło harto ne

6

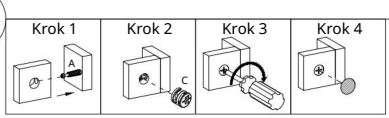

Upgrad

C x6

X x2

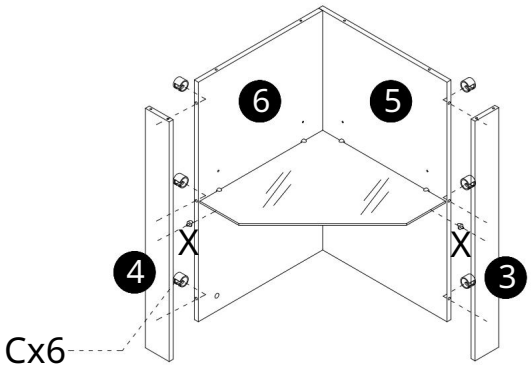

Machine Translated by Google

7

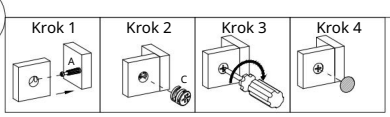



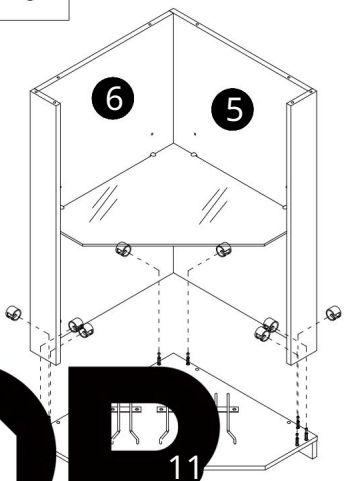

EVOR

·The Home Creator Way

8

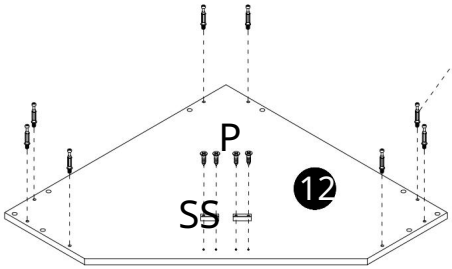

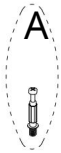





Machine Translated by Google

9

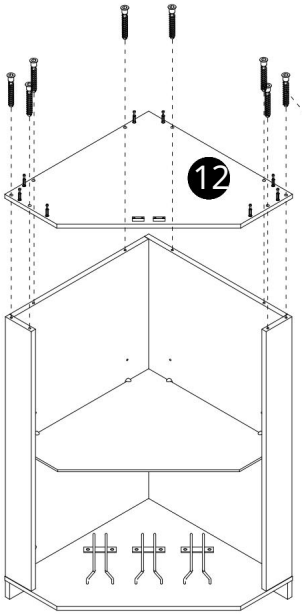



10





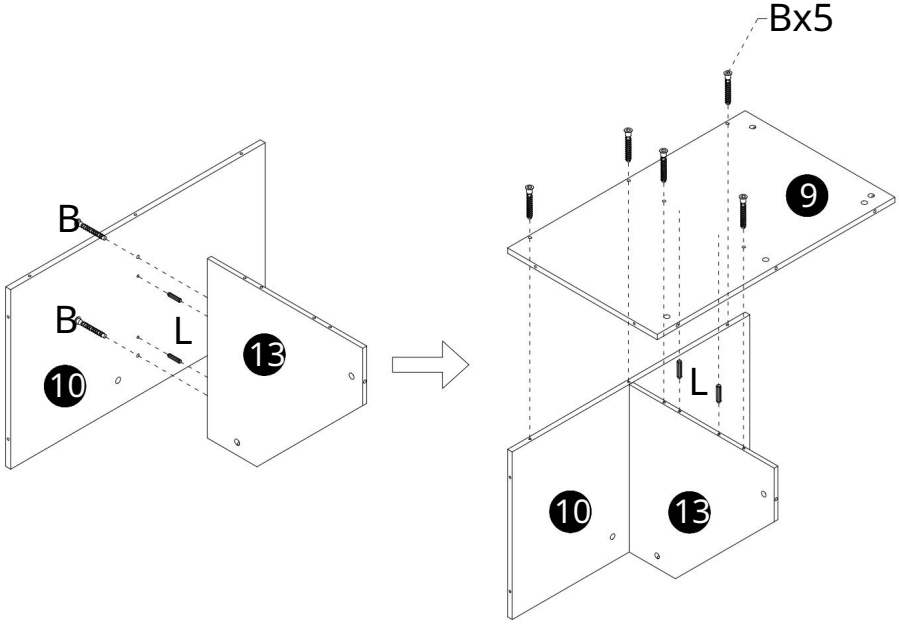

Machine Translated by Google

11

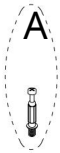

x8

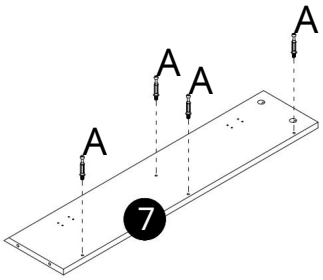

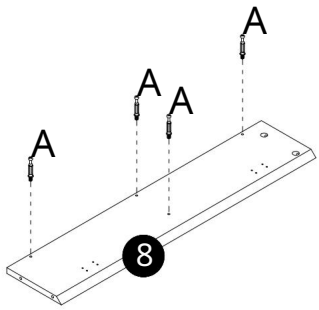

12

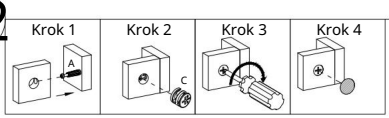



x8

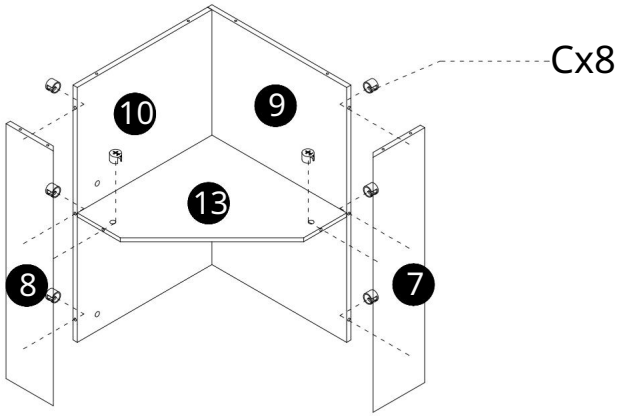

Machine Translated by Google

13

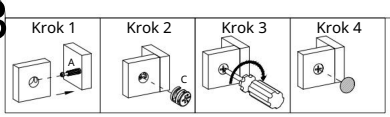



x8

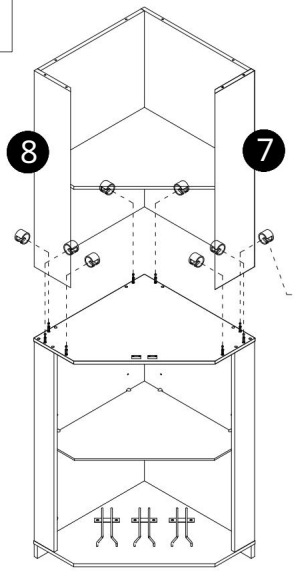

Cx8

14



x10

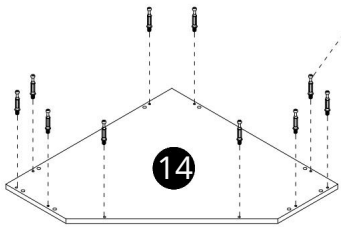

Oś 10

Machine Translated by Google

15

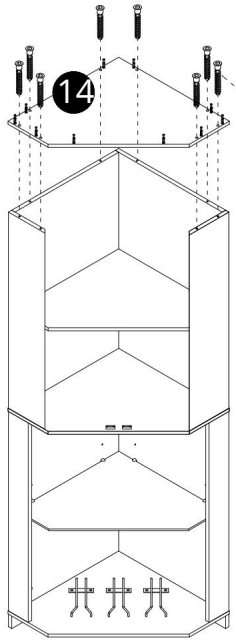



x8

16

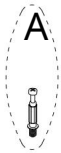

x6

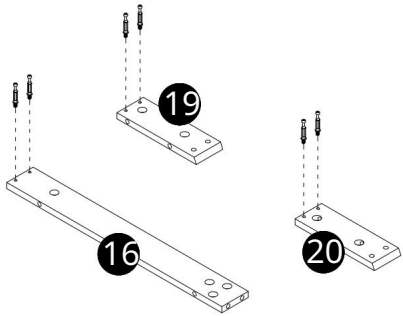

17

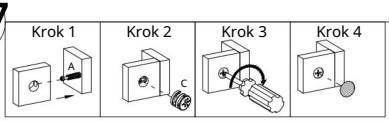



x6

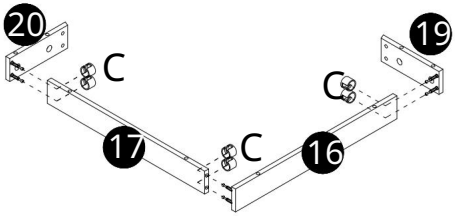

16



x2



x8

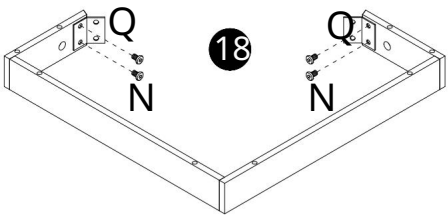

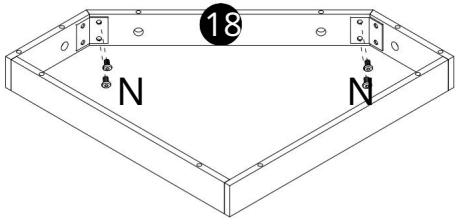

Machine Translated by Google

17

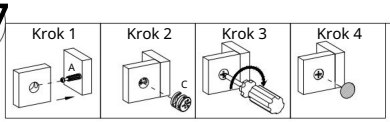

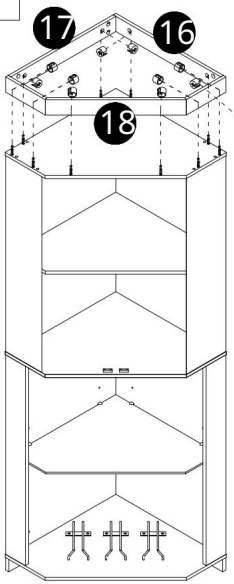



18









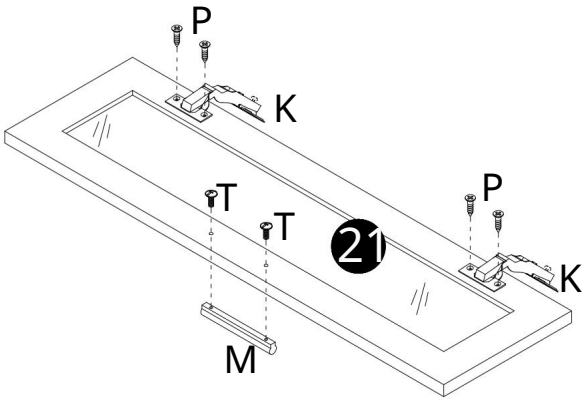

x2

Machine Translated by Google

19



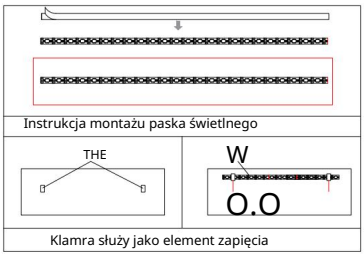

Pasek świetlny montowany jest pod płytą warstwową

Pasek LED przechodzi przez otwór w tablicy

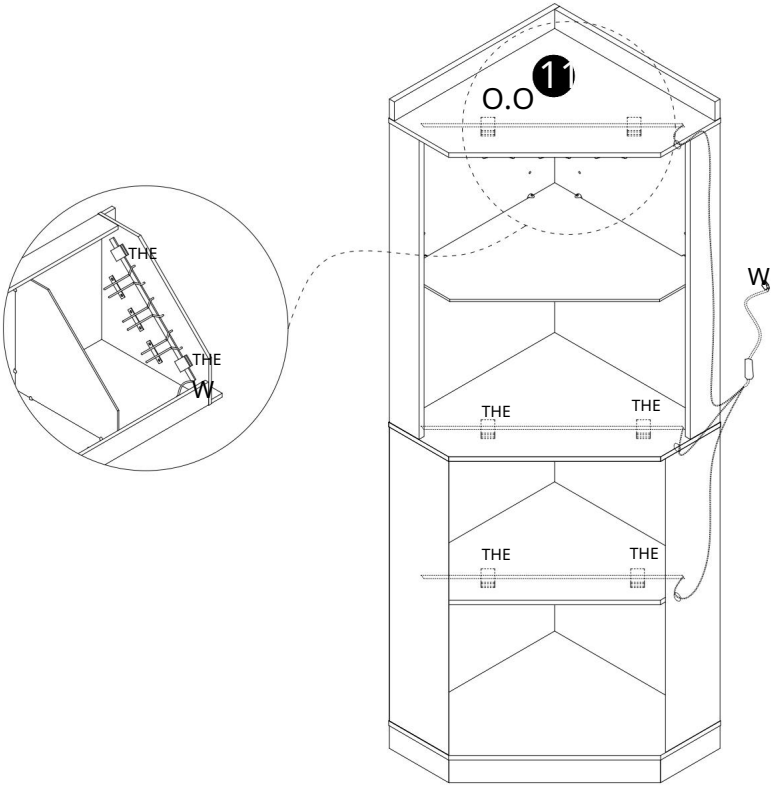

Pas światła przechodzi z prawej strony

Machine Translated by Google

20

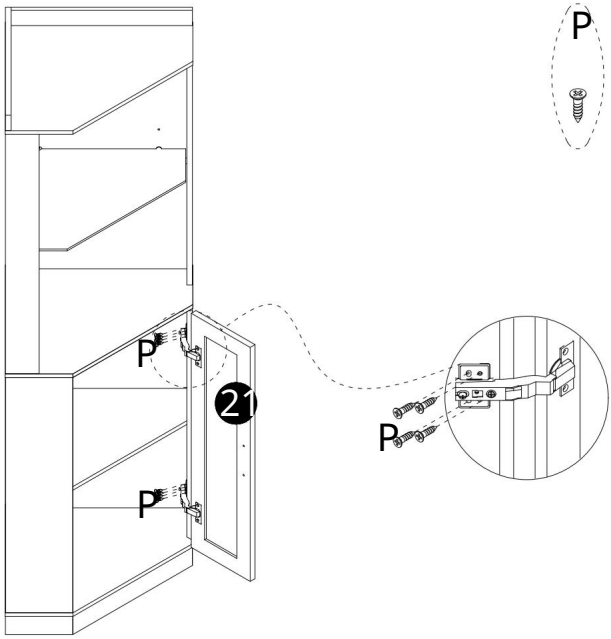

21

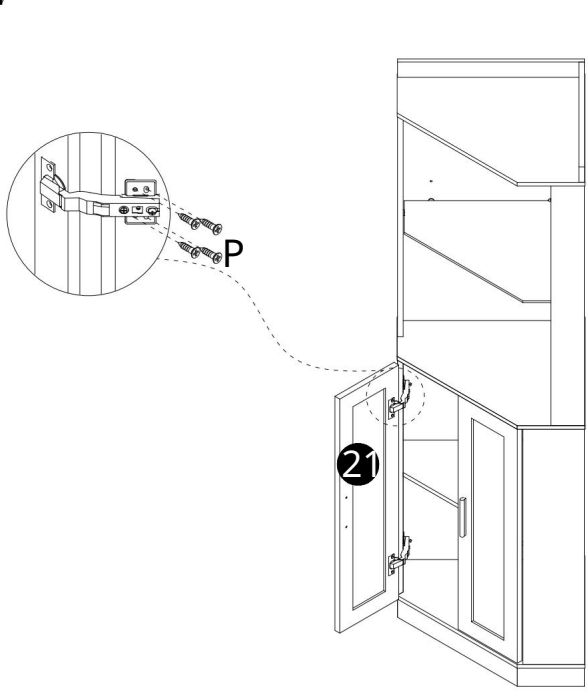

Machine Translated by Google

Metoda regulacji zawiasów drzwi

Metoda 1:

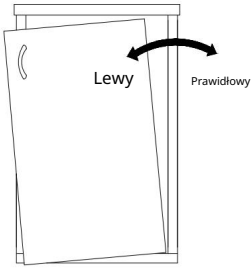

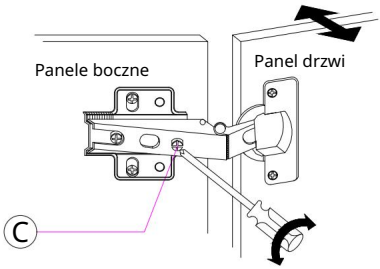

Przesuń drzwi w lewo lub w prawo: 1. Obróć śrubę C śrubokrętem zgodnie z ruchem wskazówek zegara, aby przesunąć panel drzwi w lewo. 2. Obróć śrubę C

przeciwnie do ruchu wskazówek zegara za pomocą śrubokręta, aby przesunąć panel drzwi w prawo

Metoda 2:

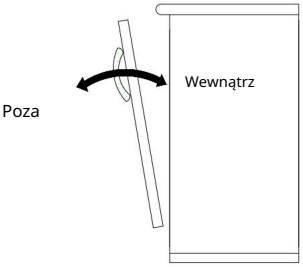

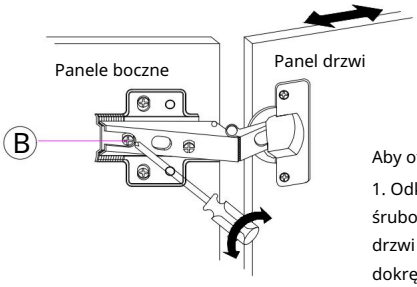

Aby otworzyć lub otworzyć drzwi:

1. Odkręć śrubę B za pomocą śrubokręta, jak pokazano na rysunku 2. Przesuń drzwi do właściwej pozycji. 3. Ponownie dokręć śruby.

Metoda 3:

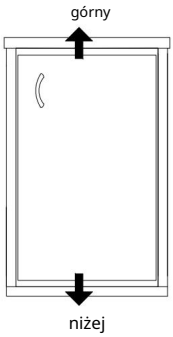

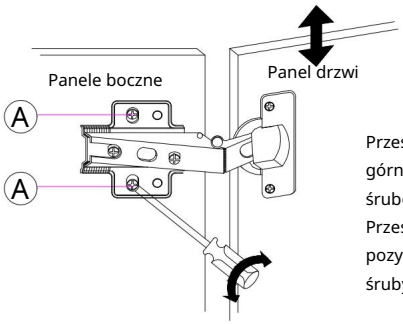

Przesuń drzwi w górę i w dół: 1. Odkręć górne i dolne śruby A za pomocą śrubokręta, jak pokazano na rysunku 2. Przesuń drzwi do właściwej pozycji i wyrównaj drzwi 3. Ponownie dokręć śruby

Machine Translated by Google

Zamontuj zabezpieczenie przed przewróceniem

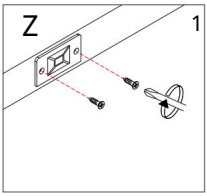

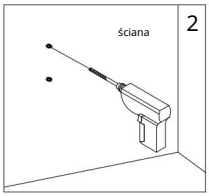

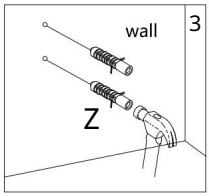

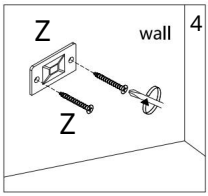

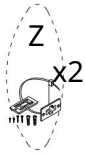



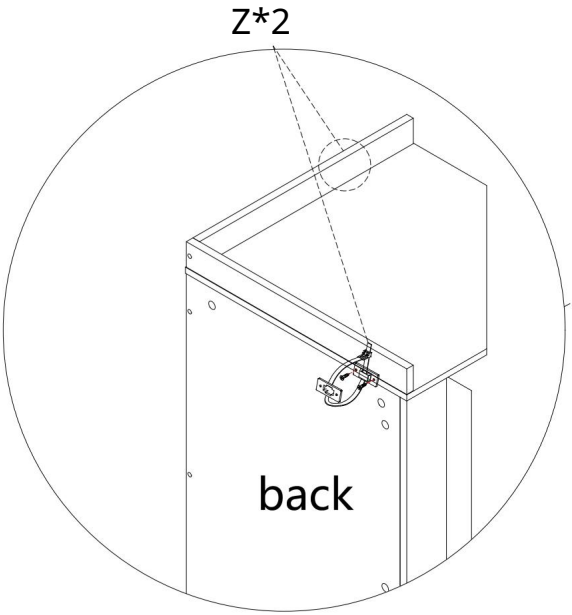

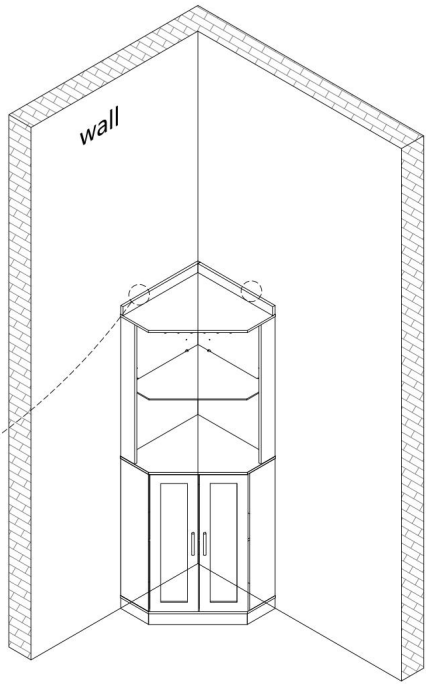

Machine Translated by Google

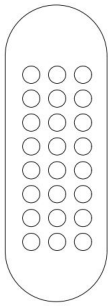

Zdalne sterowanie

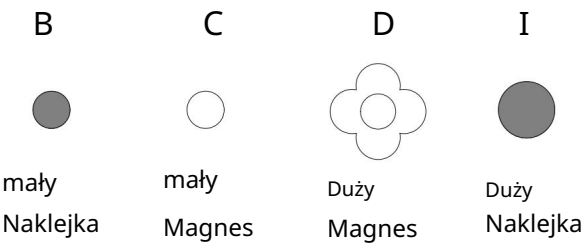

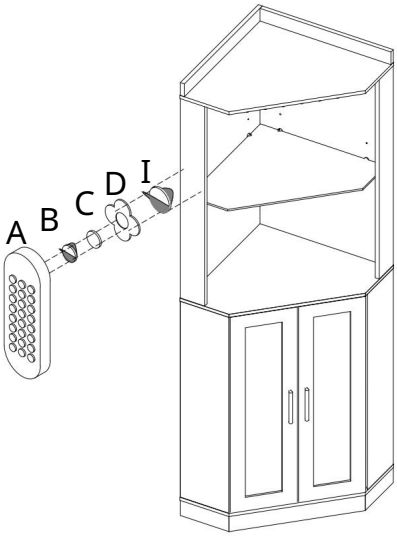

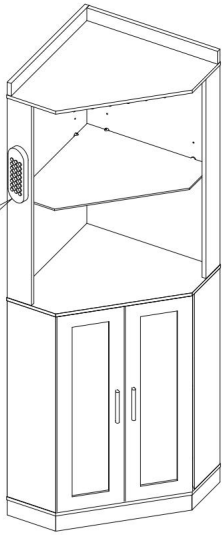

Pozycja pilota zdalnego sterowania
jest determinowane przez osobiste nawyki

Machine Translated by Google



Machine Translated by Google

VEVOR

Upgrade · The Home Creator Way

Plate type wine cabinet

MODEL: DX0202-C250499S-01

Machine Translated by Google

VEVOR
Upgrade·The Home Creator Way

Plate type wine cabinet

MODEL: DX0202-C250499S-01

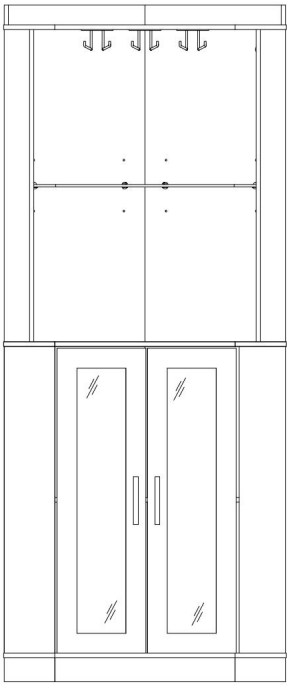

This is the original instruction, please read all manual instructions carefully before operating. VEVOR reserves a clear interpretation of our user manual. The appearance of the product shall be subject to the product you received. Please forgive us that we won't inform you again if there are any technology or software updates on our product.

Machine Translated by Google

SAFETY INSTRUCTIONS

INTRODUCTION

Thank you for purchasing our products. Committed to providing customers with the best quality products and service has always been our lifelong goal. Before using the product, please read this instruction manual carefully to ensure correct use. Keep the instruction manual in a place where the user can find it at any time.

ASSEMBLY PRECAUTIONS

There are many components and accessories in the package. Each component and accessory is labeled with a letter or a number, check carefully before using any of them. Keep them away from children to prevent accidents.

1. Assemble only according to these instructions. Improper assembly may create hazards.
2. Wear ANSI-approved safety goggles and heavy-duty work gloves during assembly.
3. Keep the assembly area clean and well-lit.
4. Keep bystanders out of the area during assembly.
5. Do not assemble if tired or when under the influence of alcohol, drugs or medication.
6. The product capabilities apply to properly and completely assembled products only.
7. If possible, you can use power tools to make assembly easier.
8. The main components of the product is relatively heavy. Please pay attention to safety during installation.
9. The product is not stable during installation, Please do not move it randomly before it is completely installed.
10. For additional information regarding the parts listed in the following.
11. pages, please refer to the Assembly Diagram of this manual. Unwrap and separate all parts in a clean work area.

Machine Translated by Google

***PLEASE BE SURE TO FOLLOW THE INSTALLATION STEPS IN THE MANUAL TO AVOID UNNECSSARY LOSSES CAUSED BY IMPROPER INSTALLATION.**

USE PRECAUTIONS

1) Do not exceed specified weight capacities.
2) Use only on a flat, level, hard, and smooth surface
3) Use as intended only.
4) Inspect before every use; do not use if parts are loose or damaged.

WARNING

Children have died from furniture tipover. To reduce the risk of furniture tipover:

- **NEVER put a TV on this product.**
- **NEVER allow children to stand, climb or hang on drawers,doors,or shelves.**
- **Place heaviest items in the lowest drawers.**

SAVE THIS MANUAL

FCC Information for USB light strings:

CAUTION: Changes or modifications not expressly approved by the party responsible for compliance could void the user's authority to operate the equipment!

This device complies with Part 15 of the FCC Rules. Operation is subject to the following two conditions:

1) This product may cause harmful interference.

2)This product must accept any interference received, including interference that may cause undesired operation.

Machine Translated by Google

WARNING: Changes or modifications to this product not expressly approved by the party.responsible for compliance could void the user's authority to operate the product.

Note: This product has been tested and found to comply with the limits for a Class B digital device pursuant to Part 15 of the FCC Rules, These limits are designed to provide reasonable protection against harmful interference in a residential installation.

This product generates, uses and can radiate radio frequency energy, and if not installed and used in accordance with the instructions, may cause harmful interference to radio communications. However, there is no guarantee that interference will not occur in a particular installation. If this product does cause harmful interference to radio or television reception,which can be determined by turning the product off and on, the user is encouraged to try to correct the interference by one or more of the following measures.

· Reorient or relocate the receiving antenna.

· Increase the distance between the product and receiver.

· Connect the product to an outlet on a circuit different from that to which the receiver is connected.

· Consult the dealer or an experienced radio/TV technician for assistance.

CORRECT DISPOSAL FOR USB LIGHT STRINGS



This product is subject to the provision of european Directive 2012/19/EU. The symbol showing a wheelie bin crossed through indicates that the product requires separate refuse collection in the European Union. This applies to the product and all accessories marked with this symbol. Products marked as such may not be discarded with normal domestic waste, but must be taken to acollection point for recycling electrical and electronic devices.

Machine Translated by Google

Montage van nokken en pinnen

Draai de pin in het gat. Om de nokken correct te plaatsen, moet u ervoor zorgen dat de pijl op de nok naar het gat van de pin wijst. Vergrendel de nok door de nokkop met een schroevendraaier te draaien totdat deze vastzit. Gebruik geen elektrische schroevendraaier voor de montage.

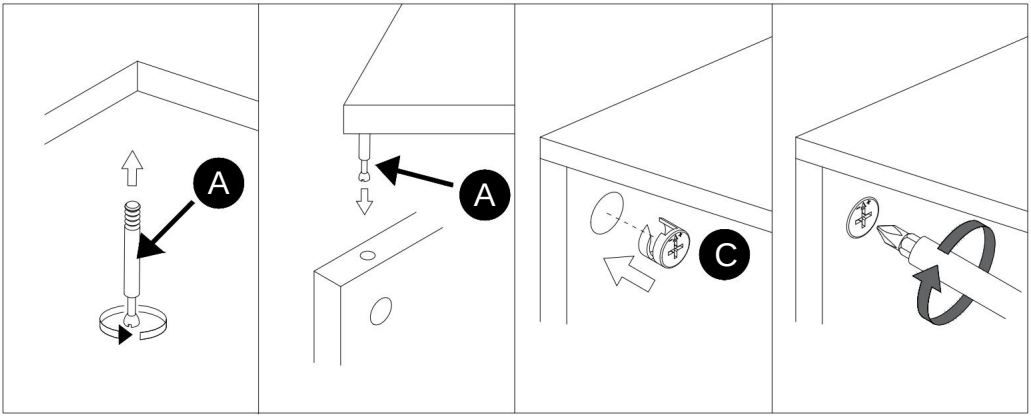

Lees elke stap zorgvuldig door voordat u begint. Het is erg belangrijk dat elke instructiestap in de juiste volgorde wordt uitgevoerd. Als deze stappen niet in de juiste volgorde worden gevolgd, zullen er montageproblemen optreden.

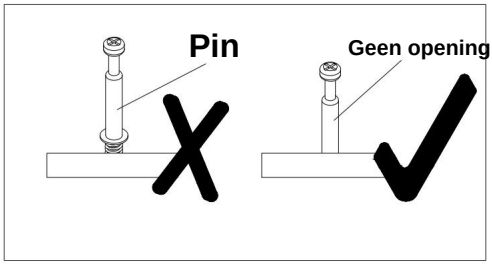

Machine Translated by Google

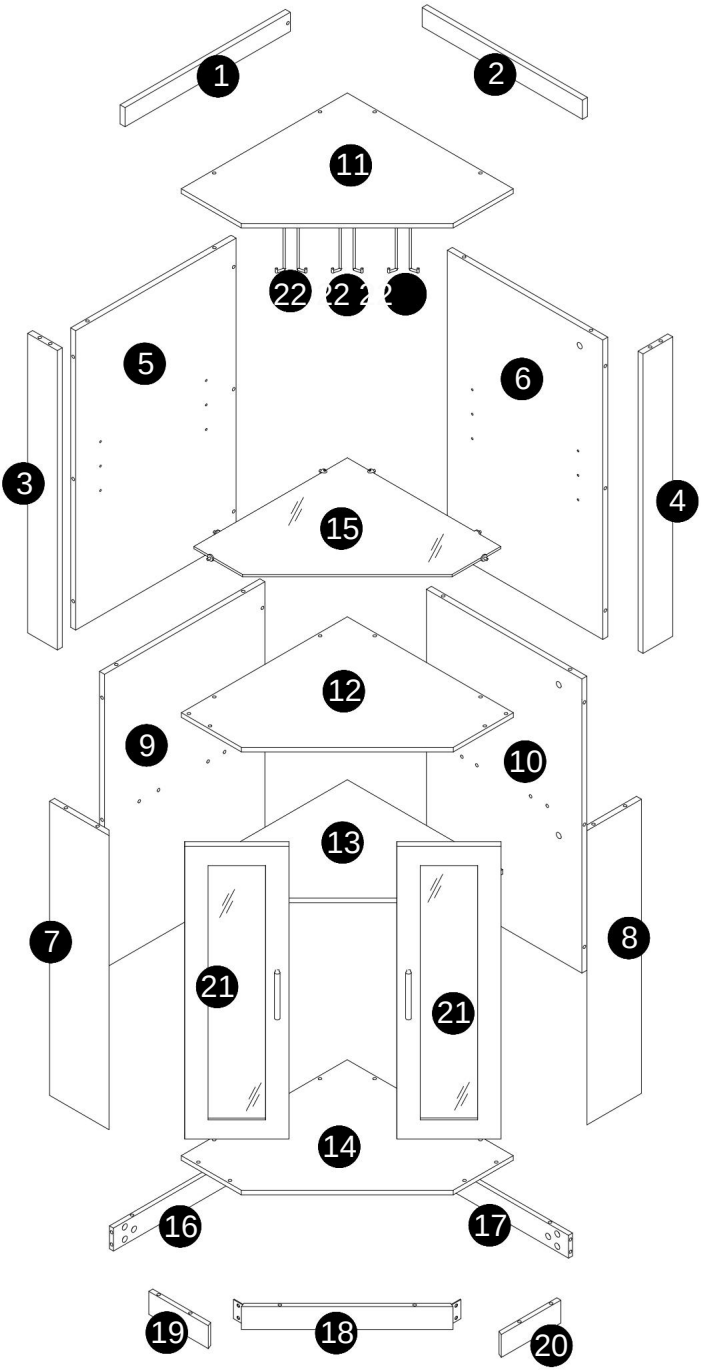

Machine Translated by Google

Onderdelen- en hardwarelijst

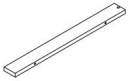 1 stuk	 2 stuks	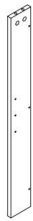 3 stuks
 4 stuks	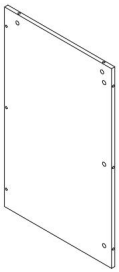 5 stuks	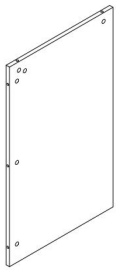 6 1 stuk
 7 1 stuk	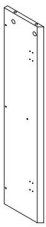 8 1 stuk	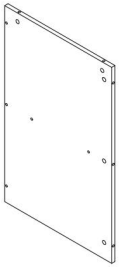 9 1 stuk
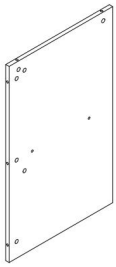 10 stuks	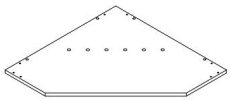 11 1 stuk	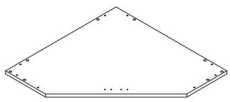 12 stuks

Machine Translated by Google

Onderdelen- en hardwarelijst

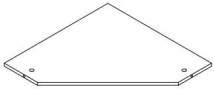 13 1 stuk	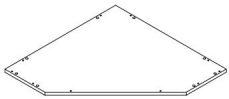 14 1 stuk	 Gehard glas 15 1 stuk
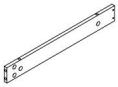 16 1 stuk	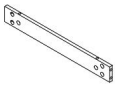 17 1 stuk	 18 1 stuk
 19 1 stuk	 20 stuks	 21 2 stuks
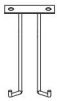 22 3 stuks		

Onderdelen- en hardwarelijst

 Een van 46 stuks	 M7X50MM B 27 stuks	 C 46 stuks	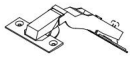 DW135° K 4 stuks
 Ø6X30MM L 4 stuks + 1	 M 2 stuks	 M6X10MM N 14 stuks	 O 6 stuks
 ST3.5X12MM P 28 stuks	 Q 2 stuks	 S 2 stuks	 M4X22MM T 4 stuks
 En 1 stuk	 W stuks	 2 stuks	 2 stuks
 1 stuk		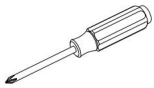	

Machine Translated by Google

1



x5

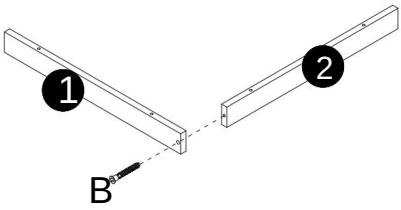

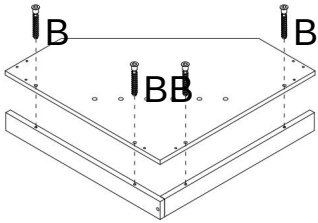

2



x6

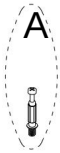

x8

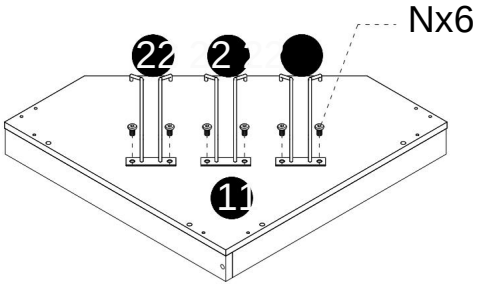

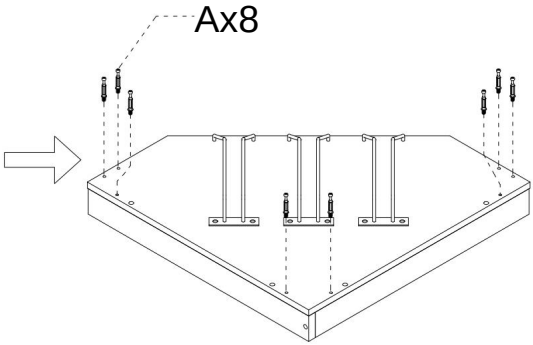

Machine Translated by Google

3



x3

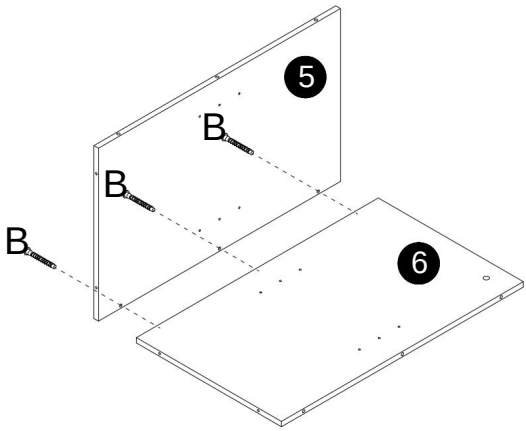

4

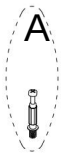

x6

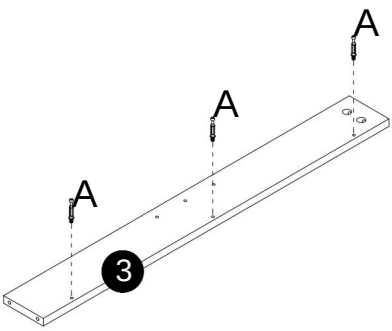

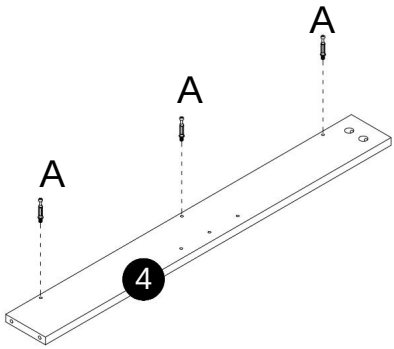

Machine Translated by Google

5

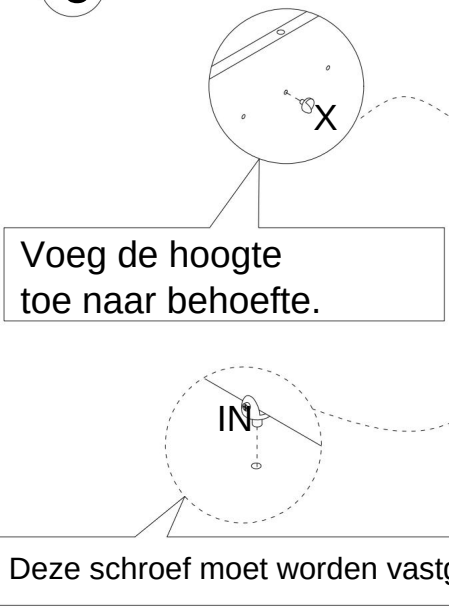

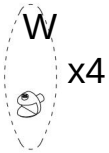

Gehard gla

V

Upgra

6

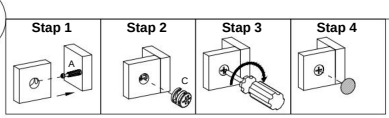

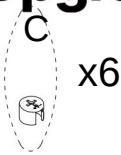

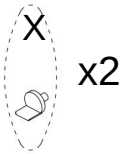

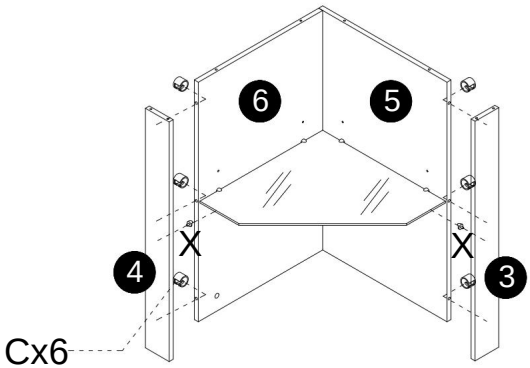

Machine Translated by Google

7

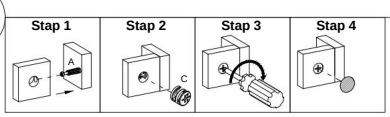



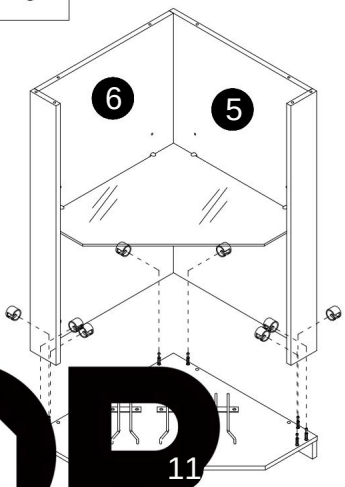

EVOR

·The Home Creator Way

8

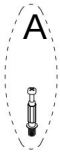

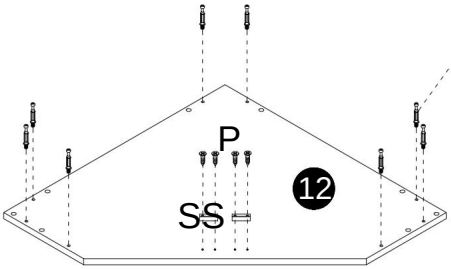





Machine Translated by Google

9

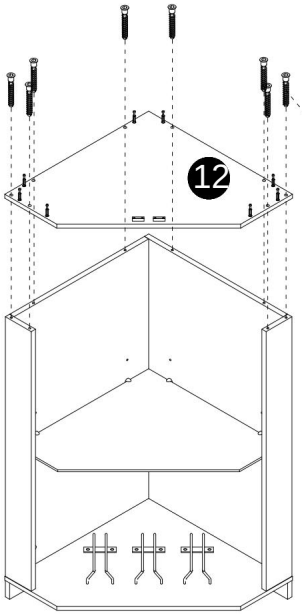



10

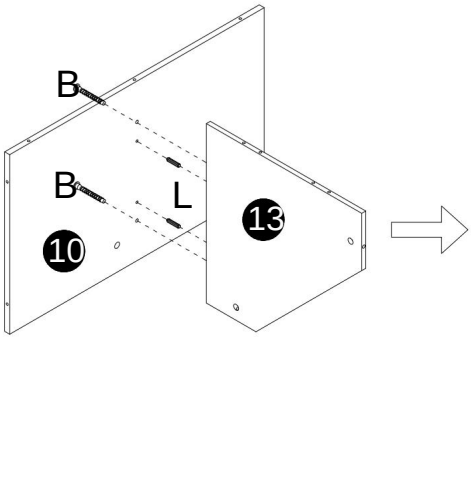





Machine Translated by Google

11

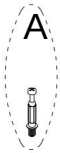

x8

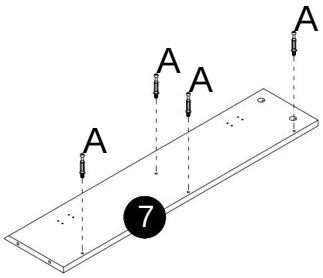

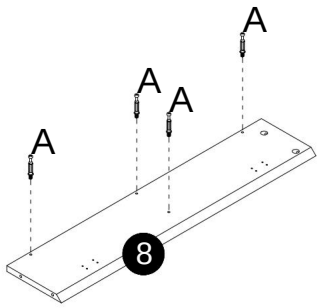

12

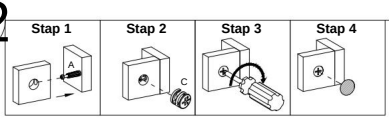



x8

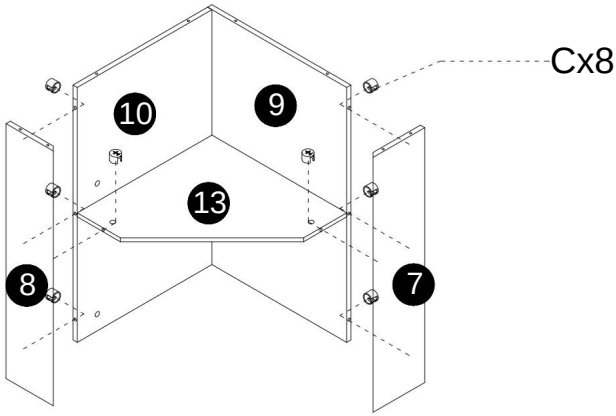

Machine Translated by Google

13

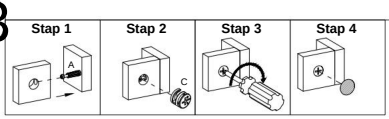



x8

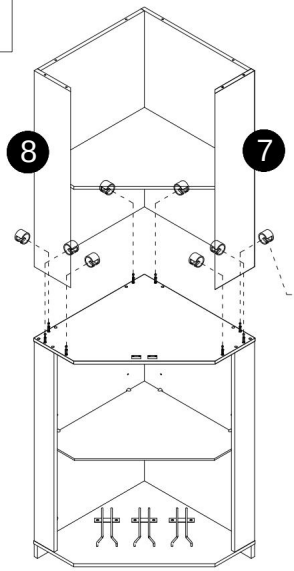

Cx8

14



x10

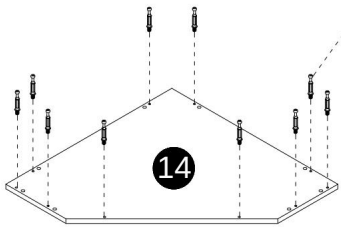

Ax10

Machine Translated by Google

15

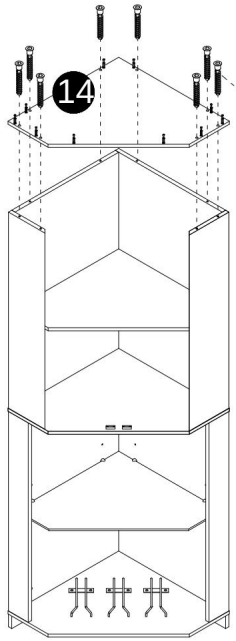



16

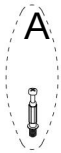

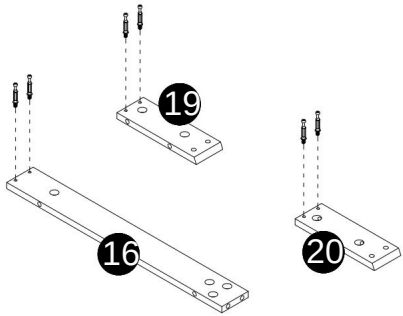

17

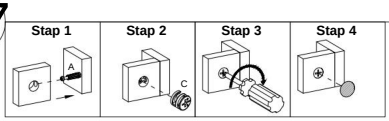



x6

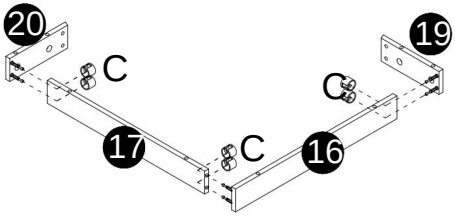

16



x2



x8

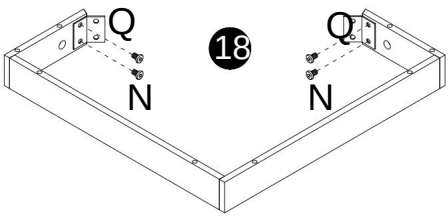

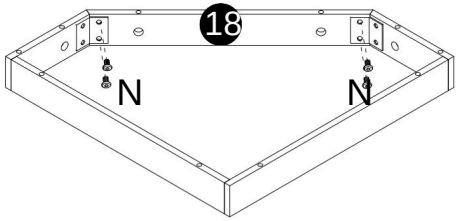

Machine Translated by Google

17

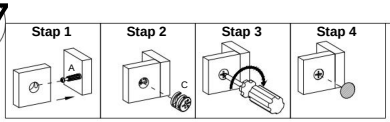

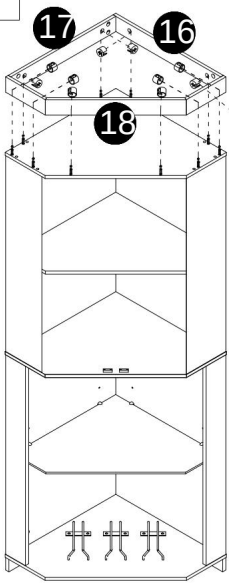



18

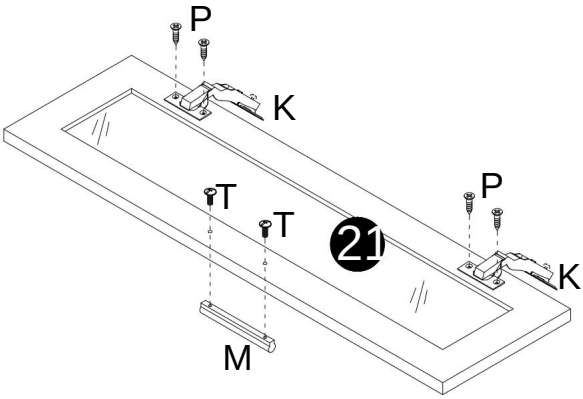









x2

Machine Translated by Google

19



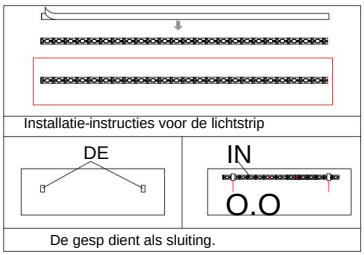

De lichtstrip is onder de laagplaat gemonteerd.

De LED-strip loopt door het gat in het achterbord.

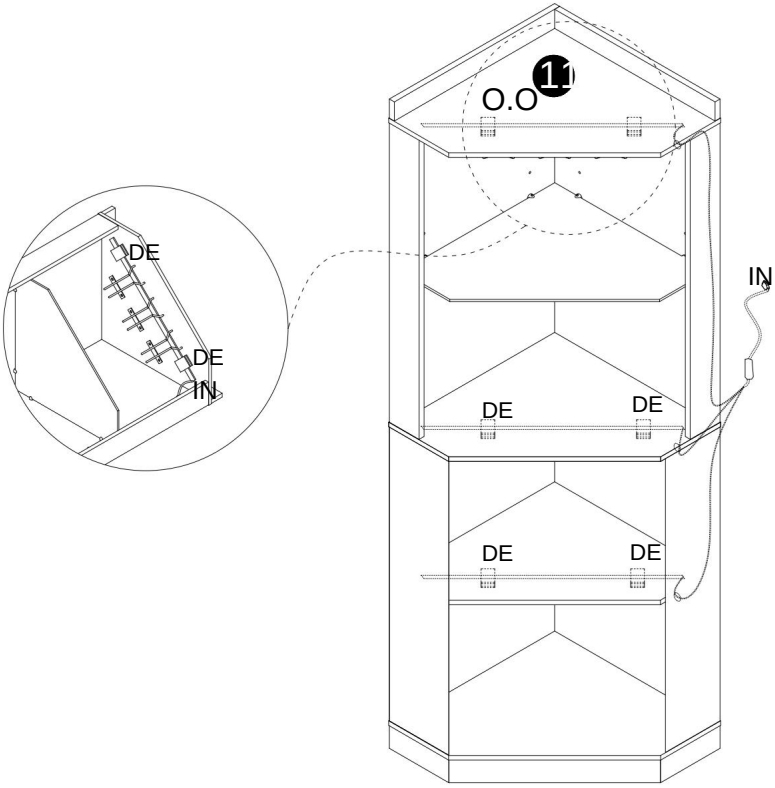

De lichtstrip komt van rechts.

Machine Translated by Google

20

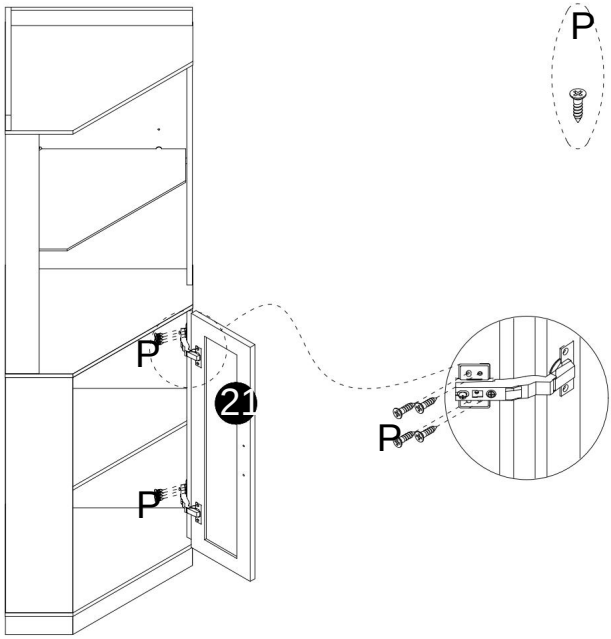

21

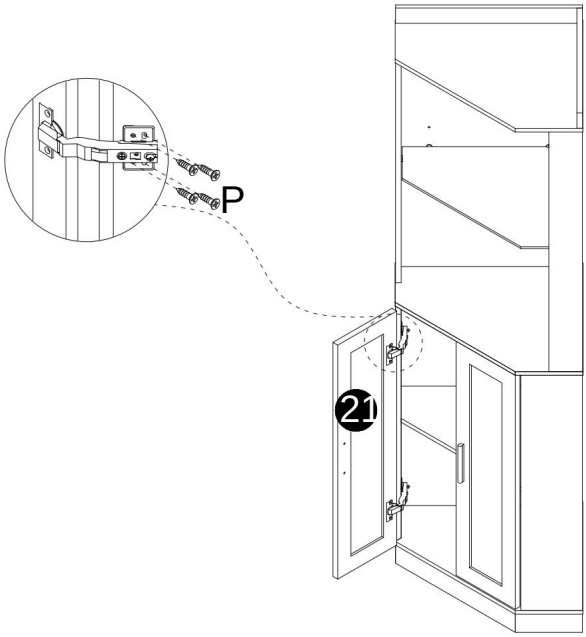

Machine Translated by Google

Methode voor het afstellen van deurscharnieren

Methode 1:

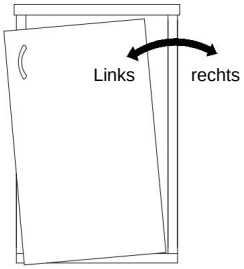

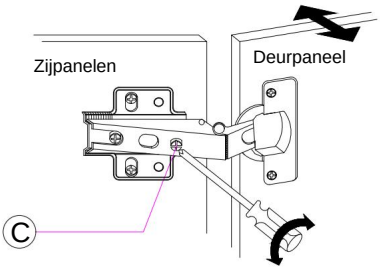

De deur naar links of rechts verplaatsen:
1. Draai de C-schroef met een schroevendraaier met de klok mee om het deurpaneel naar links te bewegen. 2. Draai de C-schroef.
Draai met een schroevendraaier tegen de klok in om het deurpaneel naar rechts te verstellen.

Methode 2:

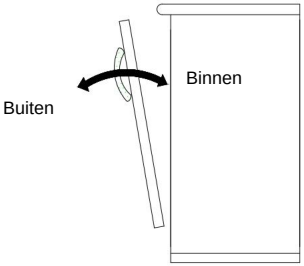

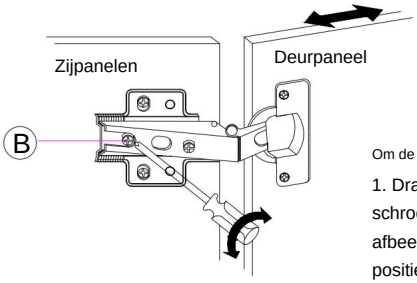

Om de deur naar binnen of naar buiten te schuiven:
1. Draai schroef B los met een schroevendraaier, zoals weergegeven in afbeelding 2. 2. Plaats de deur in de juiste positie. 3. Draai de schroeven weer vast.

Methode 3:

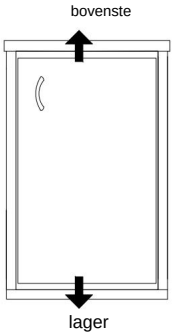

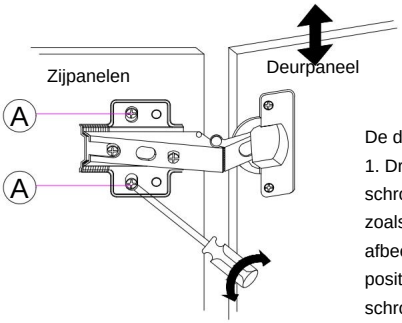

De deur omhoog en omlaag bewegen:
1. Draai de bovenste en onderste schroeven A los met een schroevendraaier, zoals weergegeven in afbeelding 2. Beweeg de deur naar de juiste positie en lijn deze uit. 3. Draai de schroeven weer vast.

Machine Translated by Google

Installeer de bevestigingsmaterialen voor de kantelbeveiliging.

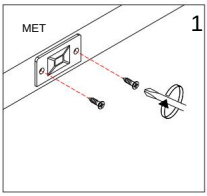

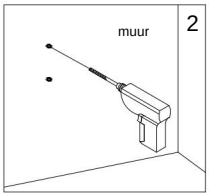

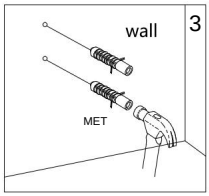

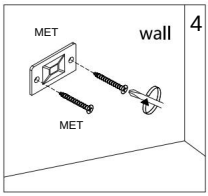





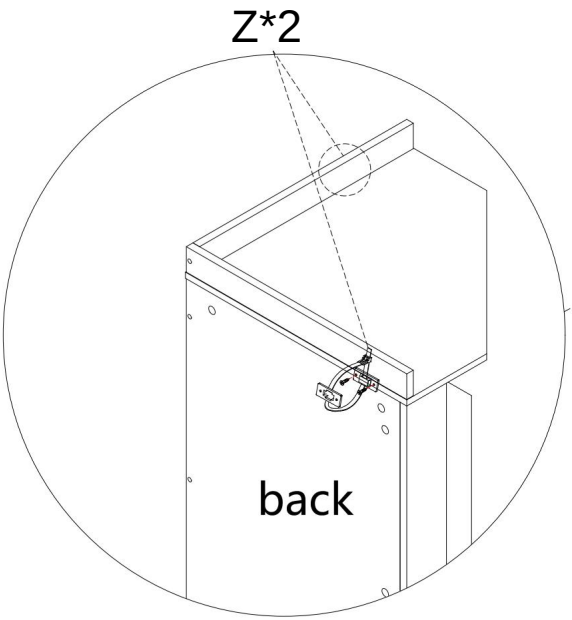

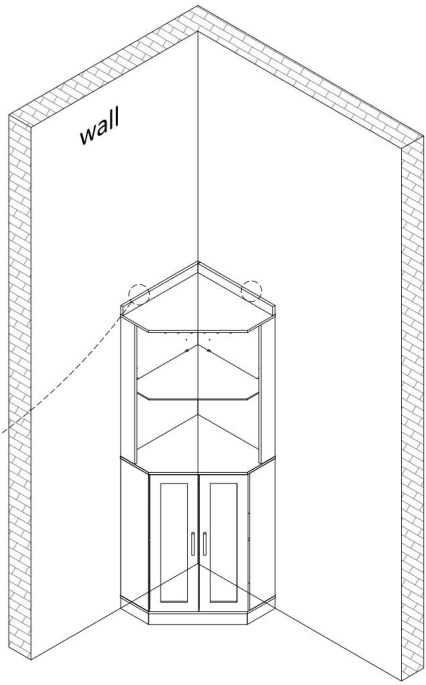

Machine Translated by Google

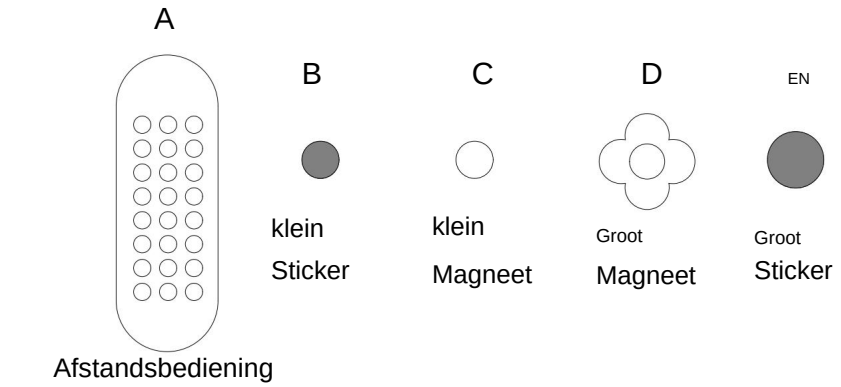

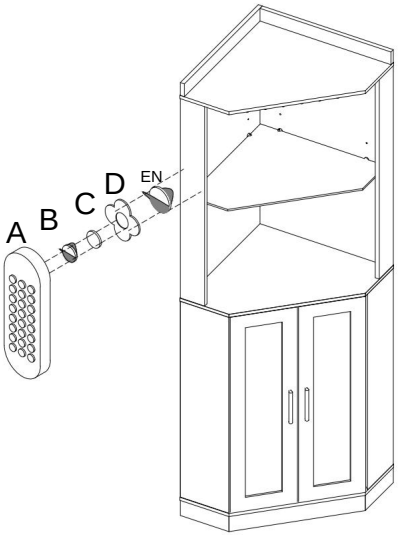

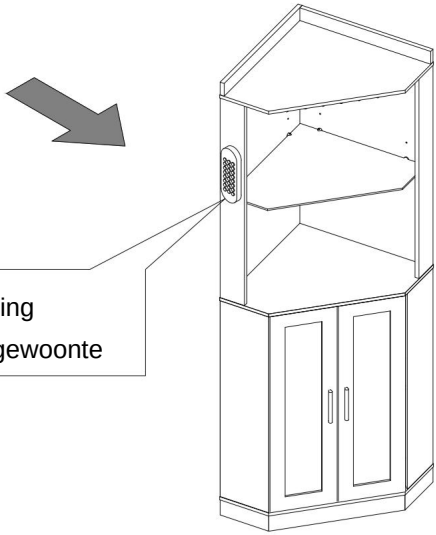

De positie van de afstandsbediening
wordt bepaald door persoonlijke gewoonte

Machine Translated by Google



Machine Translated by Google

VEVOR

Upgrade · The Home Creator Way

Plate type wine cabinet

MODEL: DX0202-C250499S-01

Machine Translated by Google

VEVOR
Upgrade·The Home Creator Way

Plate type wine cabinet

MODEL: DX0202-C250499S-01

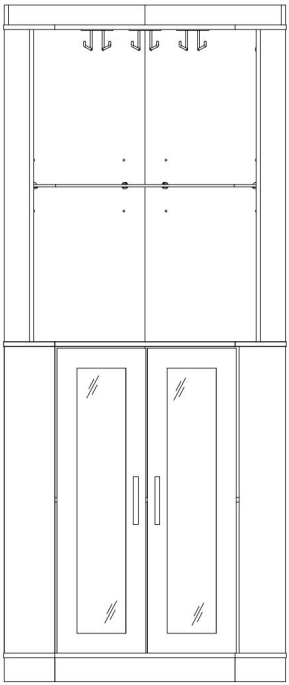

This is the original instruction, please read all manual instructions carefully before operating. VEVOR reserves a clear interpretation of our user manual. The appearance of the product shall be subject to the product you received. Please forgive us that we won't inform you again if there are any technology or software updates on our product.

Machine Translated by Google

SAFETY INSTRUCTIONS

INTRODUCTION

Thank you for purchasing our products. Committed to providing customers with the best quality products and service has always been our lifelong goal. Before using the product, please read this instruction manual carefully to ensure correct use. Keep the instruction manual in a place where the user can find it at any time.

ASSEMBLY PRECAUTIONS

There are many components and accessories in the package. Each component and accessory is labeled with a letter or a number, check carefully before using any of them. Keep them away from children to prevent accidents.

1. Assemble only according to these instructions. Improper assembly may create hazards.
2. Wear ANSI-approved safety goggles and heavy-duty work gloves during assembly.
3. Keep the assembly area clean and well-lit.
4. Keep bystanders out of the area during assembly.
5. Do not assemble if tired or when under the influence of alcohol, drugs or medication.
6. The product capabilities apply to properly and completely assembled products only.
7. If possible, you can use power tools to make assembly easier.
8. The main components of the product is relatively heavy. Please pay attention to safety during installation.
9. The product is not stable during installation, Please do not move it randomly before it is completely installed.
10. For additional information regarding the parts listed in the following.
11. pages, please refer to the Assembly Diagram of this manual. Unwrap and separate all parts in a clean work area.

Machine Translated by Google

***PLEASE BE SURE TO FOLLOW THE INSTALLATION STEPS IN THE MANUAL TO AVOID UNNECSSARY LOSSES CAUSED BY IMPROPER INSTALLATION.**

USE PRECAUTIONS

1) Do not exceed specified weight capacities.
2) Use only on a flat, level, hard, and smooth surface
3) Use as intended only.
4) Inspect before every use; do not use if parts are loose or damaged.

WARNING

Children have died from furniture tipover. To reduce the risk of furniture tipover:

- **NEVER put a TV on this product.**
- **NEVER allow children to stand, climb or hang on drawers,doors,or shelves.**
- **Place heaviest items in the lowest drawers.**

SAVE THIS MANUAL

FCC Information for USB light strings:

CAUTION: Changes or modifications not expressly approved by the party responsible for compliance could void the user's authority to operate the equipment!

This device complies with Part 15 of the FCC Rules. Operation is subject to the following two conditions:

1) This product may cause harmful interference.

2)This product must accept any interference received, including interference that may cause undesired operation.

Machine Translated by Google

WARNING: Changes or modifications to this product not expressly approved by the party.responsible for compliance could void the user's authority to operate the product.

Note: This product has been tested and found to comply with the limits for a Class B digital device pursuant to Part 15 of the FCC Rules, These limits are designed to provide reasonable protection against harmful interference in a residential installation.

This product generates, uses and can radiate radio frequency energy, and if not installed and used in accordance with the instructions, may cause harmful interference to radio communications. However, there is no guarantee that interference will not occur in a particular installation. If this product does cause harmful interference to radio or television reception,which can be determined by turning the product off and on, the user is encouraged to try to correct the interference by one or more of the following measures.

· Reorient or relocate the receiving antenna.

· Increase the distance between the product and receiver.

· Connect the product to an outlet on a circuit different from that to which the receiver is connected.

· Consult the dealer or an experienced radio/TV technician for assistance.

CORRECT DISPOSAL FOR USB LIGHT STRINGS



This product is subject to the provision of european Directive 2012/19/EU. The symbol showing a wheelie bin crossed through indicates that the product requires separate refuse collection in the European Union. This applies to the product and all accessories marked with this symbol. Products marked as such may not be discarded with normal domestic waste, but must be taken to acollection point for recycling electrical and electronic devices.

Machine Translated by Google

Installation av kammar och stift

Skruva fast stiftet i hålet. För att justera kammarna korrekt, se till att pilen på kammen pekar mot hålet på stiftet som den låser. Lås kammen genom att vrida kamhuvudet med en skruvmejsel tills den är åtdragen. Använd inte en elektrisk skruvmejsel för att montera enheten.

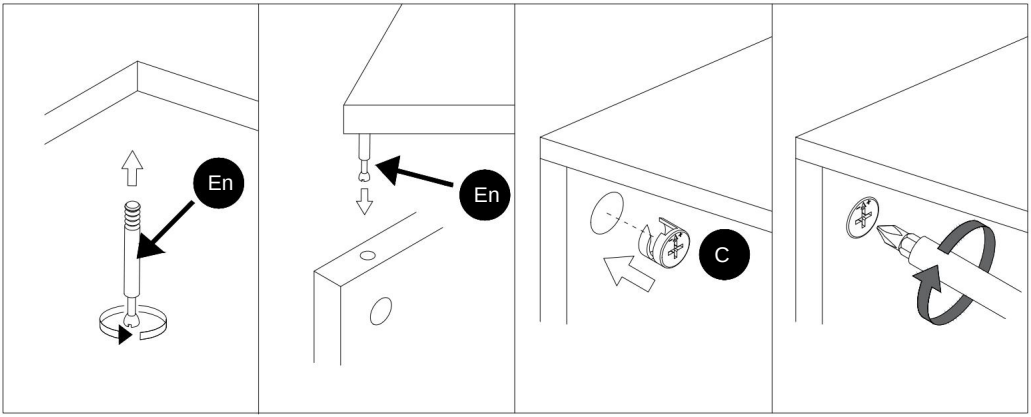

Läs varje steg noggrant innan du börjar. Det är mycket viktigt att varje steg i instruktionerna utförs i rätt ordning. Om dessa steg inte följs i rätt ordning kommer monteringsproblem att uppstå.

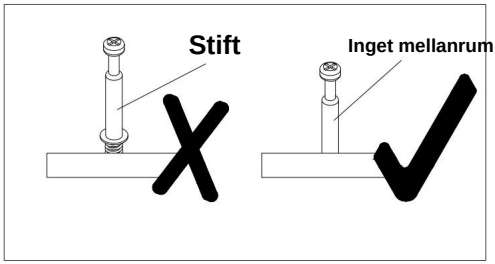

Machine Translated by Google

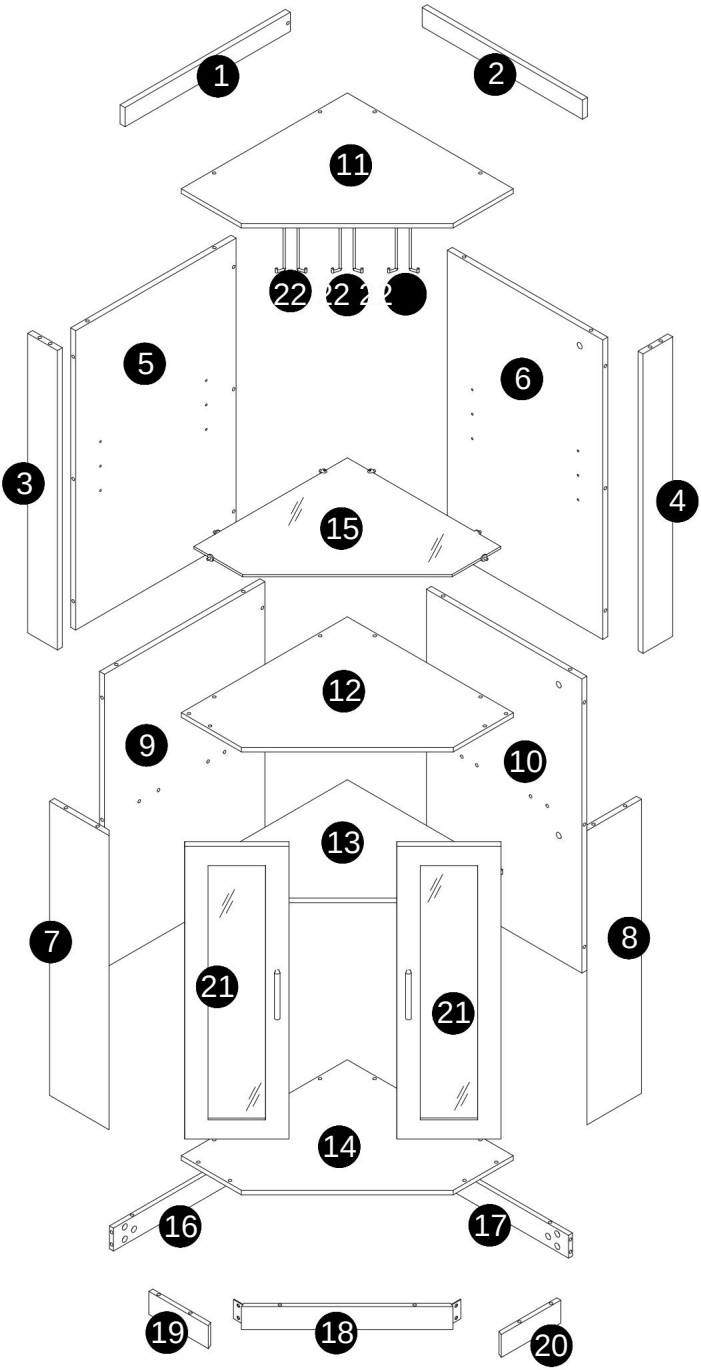

Machine Translated by Google

Delar och hårdvara lista

 1 st	 2 1 st	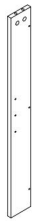 3 1 st
 4 1 st	 5 1 st	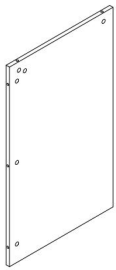 6 1 st
 7 1 st	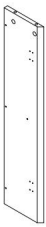 8 1 st	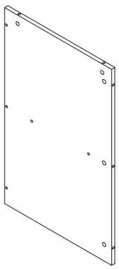 9 1 st
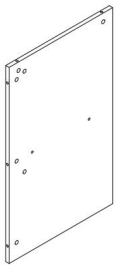 10 1 st	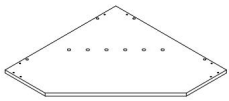 11 1 st	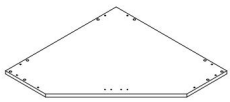 12 1 st

Machine Translated by Google

Delar och hårdvara lista

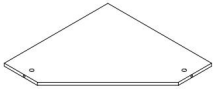 13 1 st	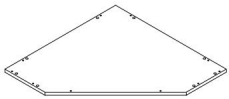 14 1 st	 Härdat glas 15 1 st
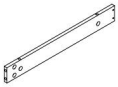 16 1 st	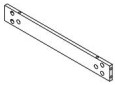 17 1 st	 18 1 st
 19 1 st	 20 1 st	 21 2 st
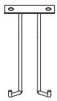 22 3 st		

Delar och hårdvara lista

	 M7X50MM		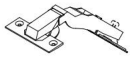 DW135°
■ 46 st	B 27 st	C 46 st	K 4 st
 Ø6X30MM		 M6X10MM	
■ 4 st + 1	M 2 st	N 14 st	O 6 st
 ST3,5X12MM			 M4X22MM
P 28 st	Q 2 st	S 2 st	T 4 st
			
■ 1 st	B 4 st	2 st	■ 2 st
		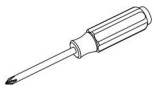	
1 st			

Machine Translated by Google

1



x5

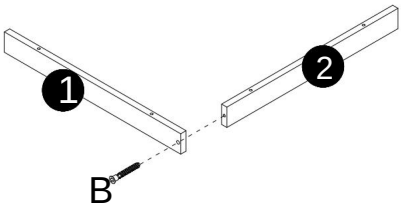

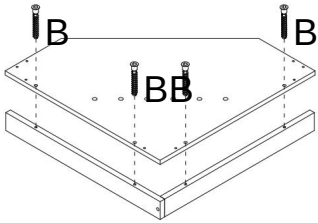

2



x6

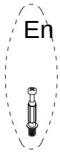

x8

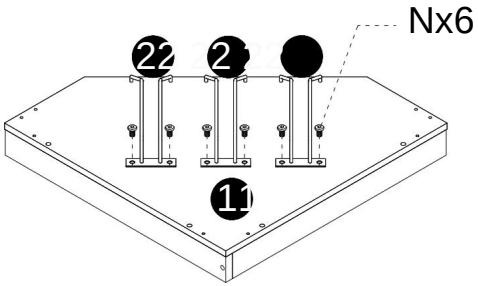

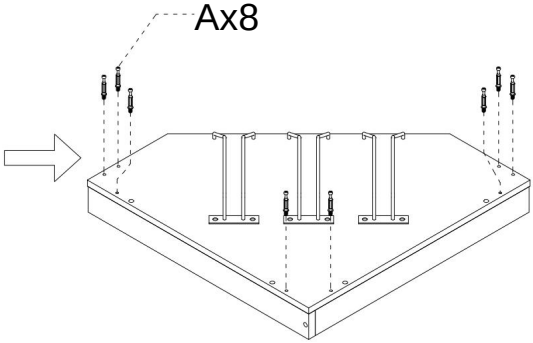

Machine Translated by Google

3



x3

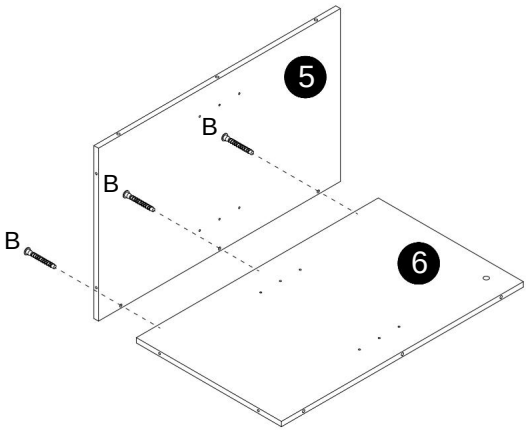

4



x6

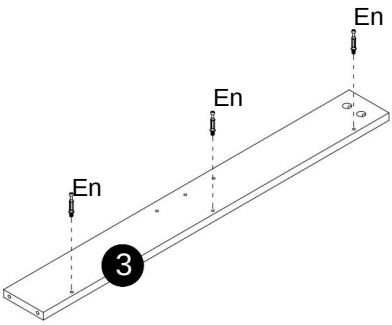

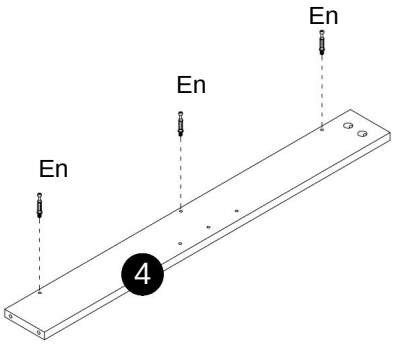

Machine Translated by Google

5

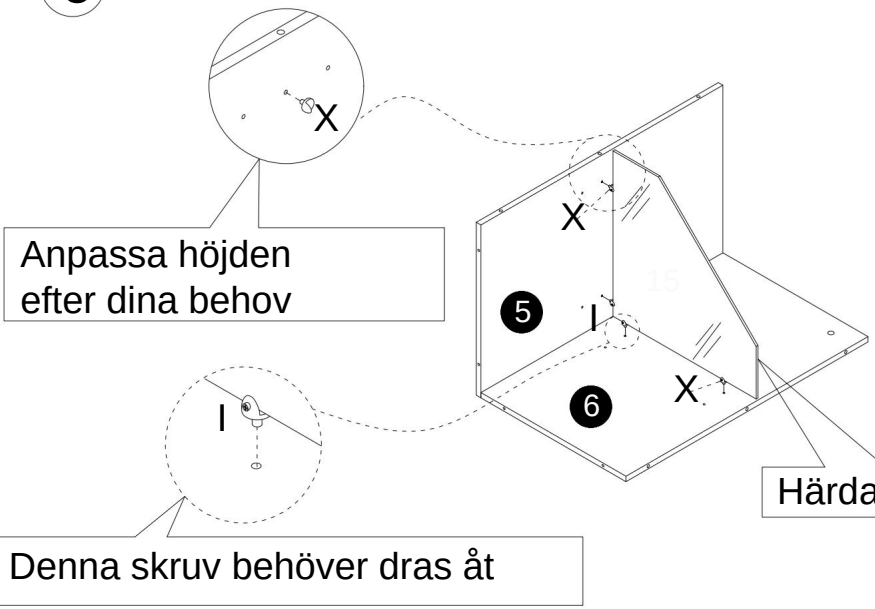

B
x4

6

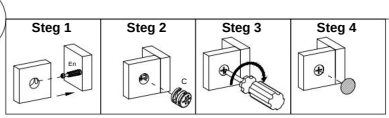

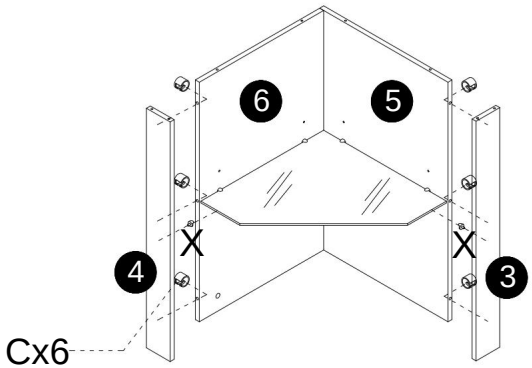

C
x6

X
x2

Machine Translated by Google

7

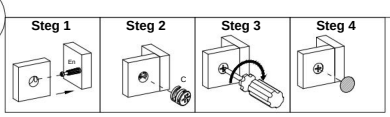



x8

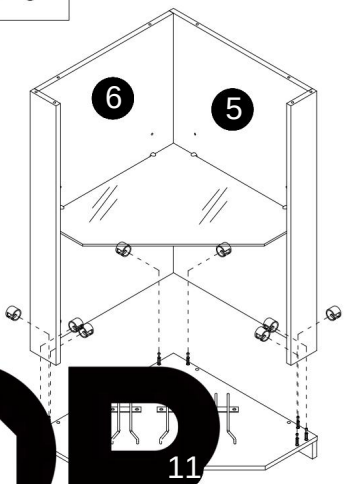

EVOR

·The Home Creator Way

8

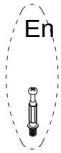

x8

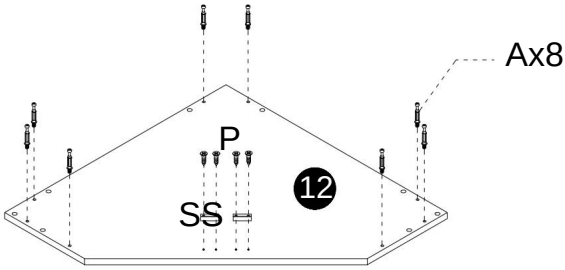



x4



x2

Machine Translated by Google

9

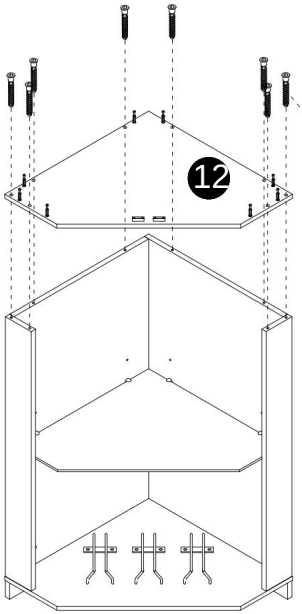



10

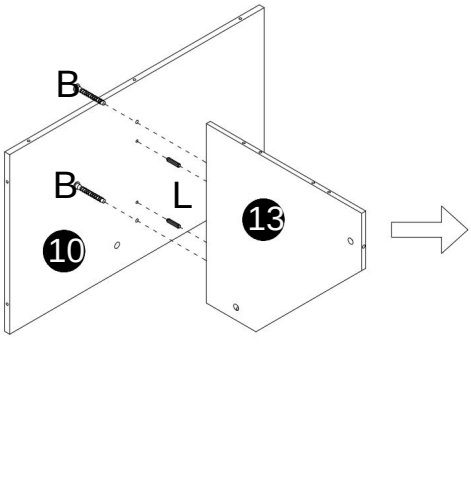





Machine Translated by Google

11

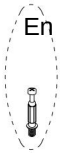

x8

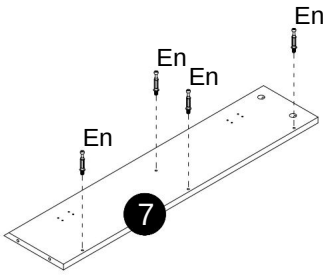

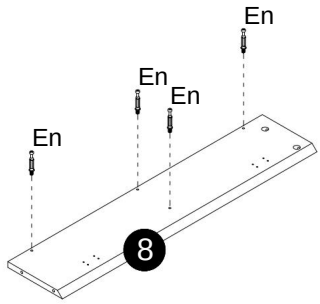

12

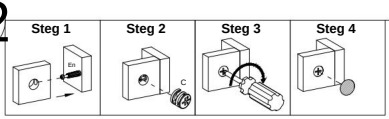



x8

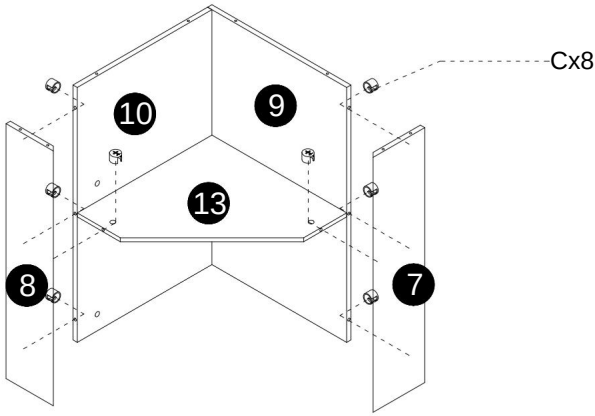

Machine Translated by Google

13

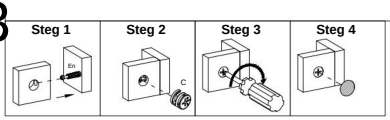



x8

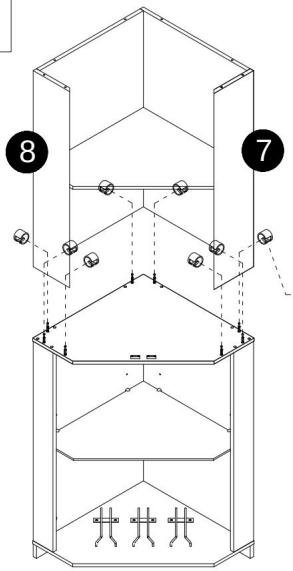

Cx8

14



x10

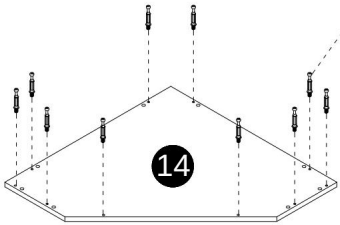

Ax10

Machine Translated by Google

15

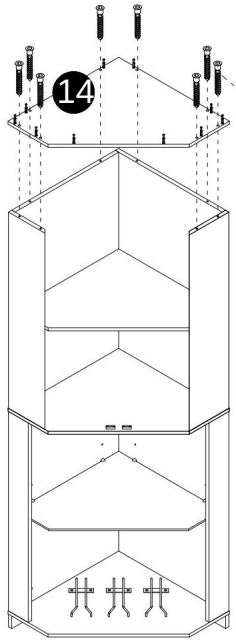



x8

16

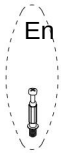

x6

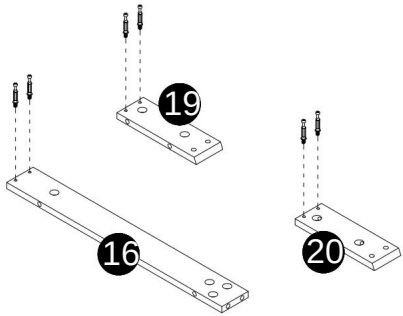

17

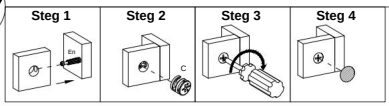



x6

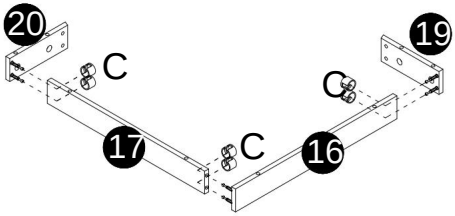

16



x2



x8

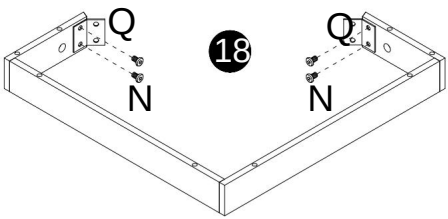

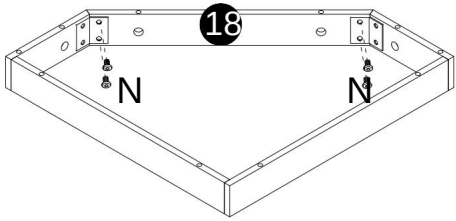

Machine Translated by Google

17

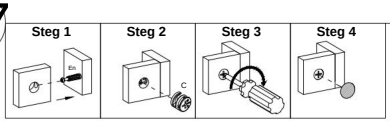

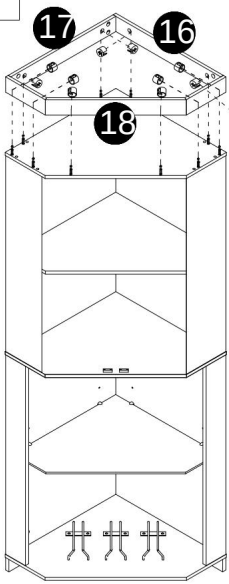

Cx10



x10

18

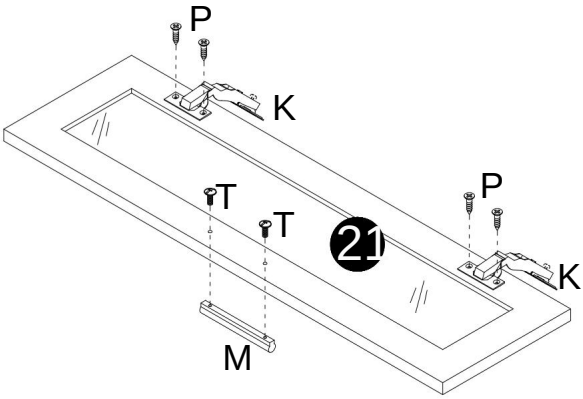

x2



x4



x8



x4



x2

Machine Translated by Google

19



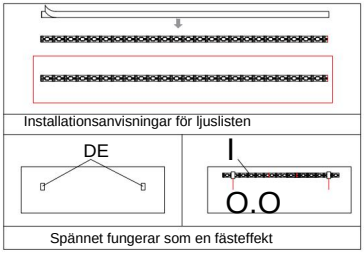

Ljusremsan är installerad under lagerplattan

LED-remsan passerar genom hålet på bakplattan

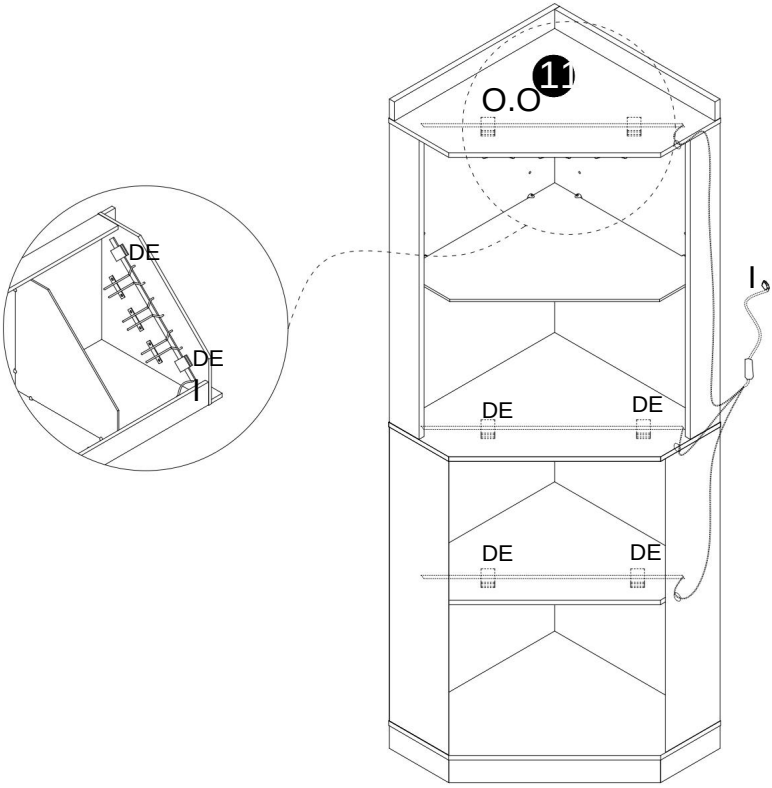

Ljuslisten passerar från höger

Machine Translated by Google

20

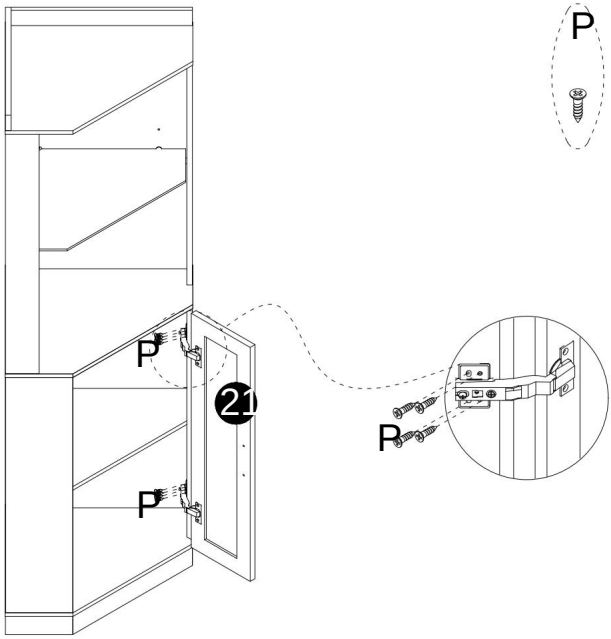

21

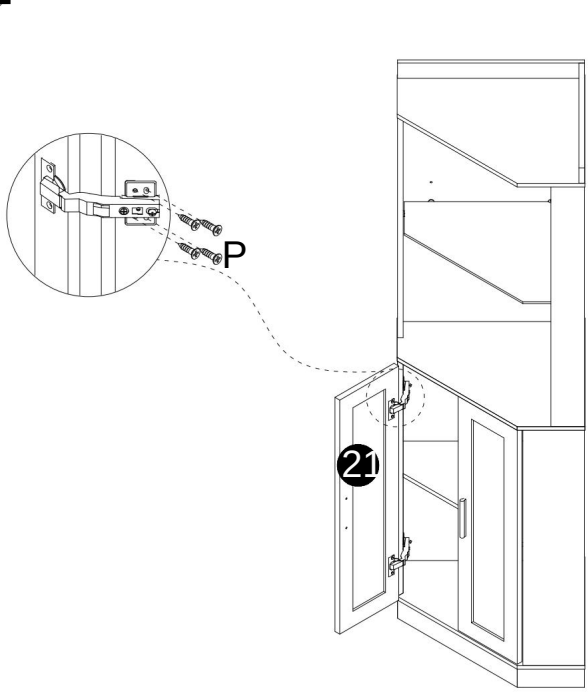

Machine Translated by Google

Justeringsmetod för dörrgångjärn

Metod 1:

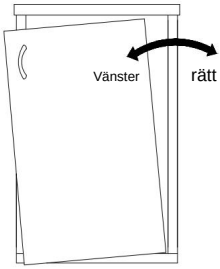

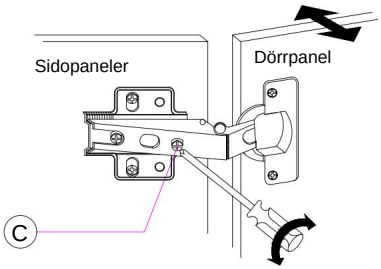

Flytta dörren åt vänster eller höger: 1. Vrid C-skruven medurs med en skruvmejsel för att flytta dörrpanelen åt vänster. 2. Vrid C-skruven

moturs med en skruvmejsel för att justera dörrpanelen så att den rör sig åt höger

Metod 2:

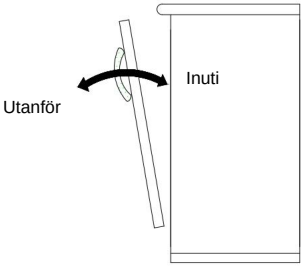

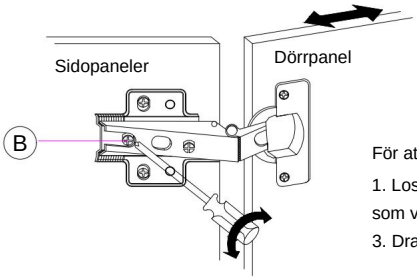

För att flytta dörren in eller ut:

1. Lossa skruv B med en skruvmejsel, som visas i figur 2. Flytta dörren till rätt position.
3. Dra åt skruvarna igen.

Metod 3:

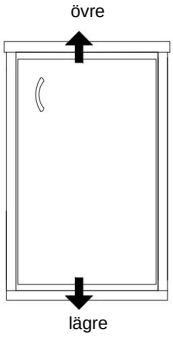

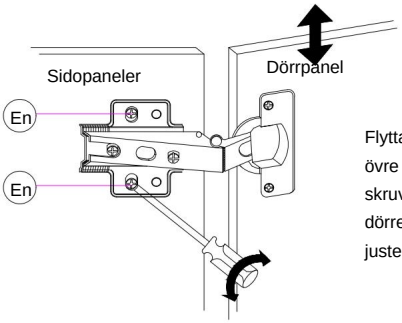

Flytta dörren upp och ner: 1. Lossa de övre och nedre skruvarna A med en skruvmejsel, som visas i figur 2. Flytta dörren till rätt position och justera den. 3. Dra åt skruvarna igen.

Machine Translated by Google

Montera tippningsskyddets beslag

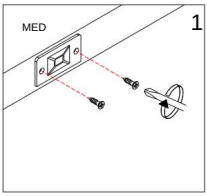

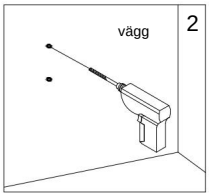

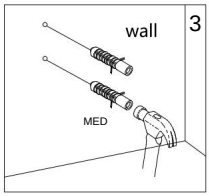

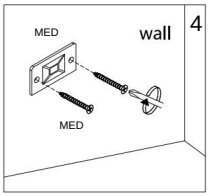





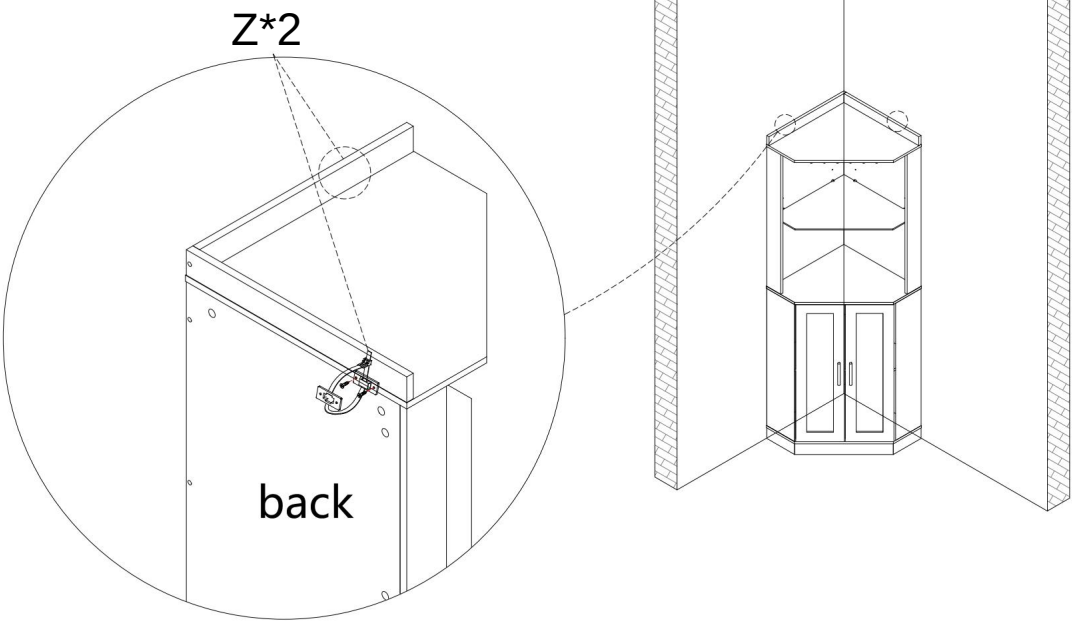

Machine Translated by Google

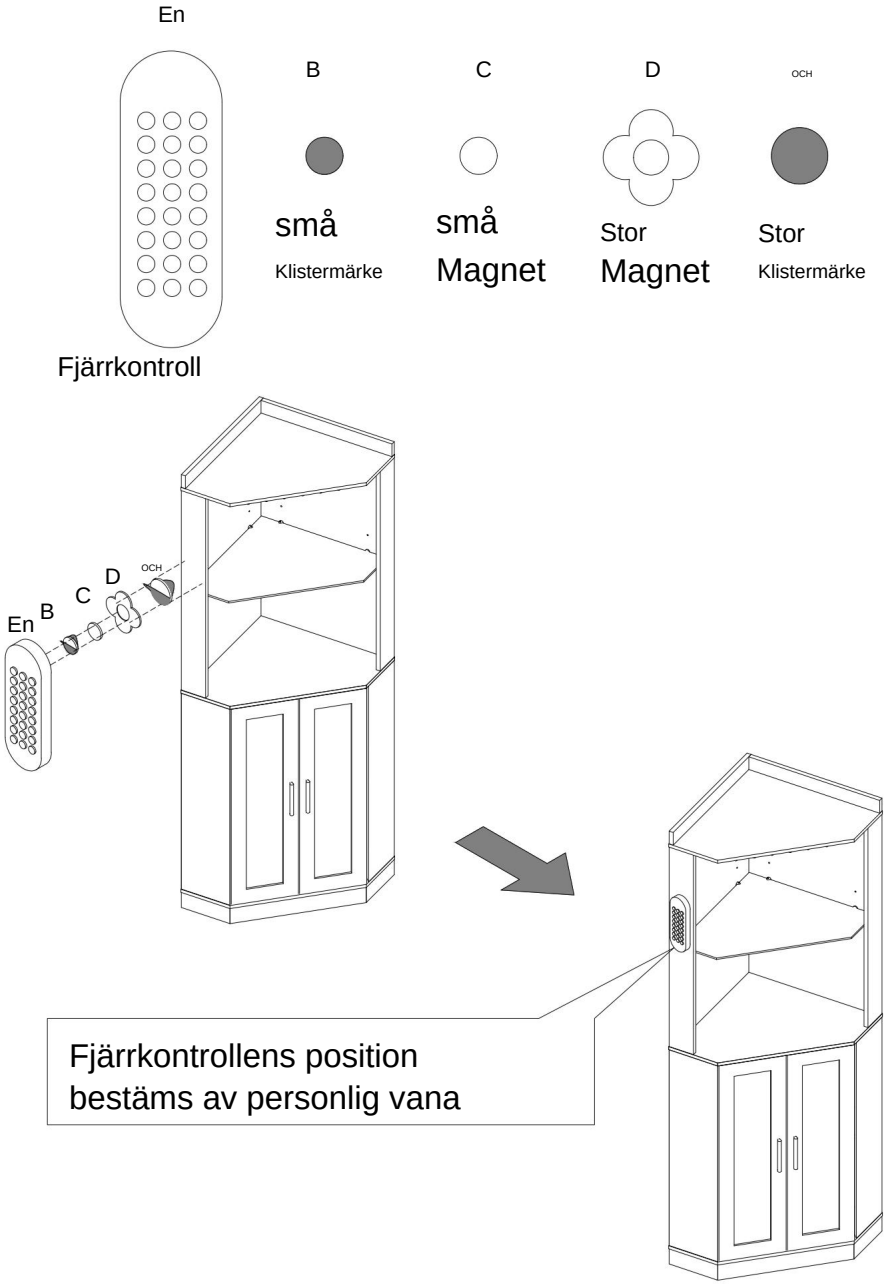

Machine Translated by Google

